EXHIBIT N

TO SKYE CANYON DEVELOPMENT AGREEMENT

STREET LIGHTS

Arterial Lane with Median

REV.	DATE	DESCRIPTION	DRN.	APPR.

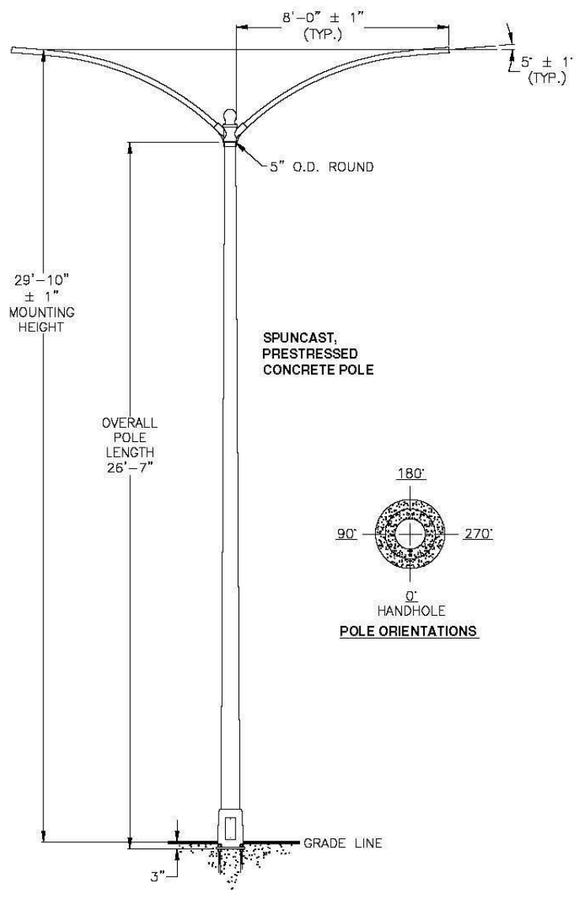

POLE ORIENTATIONS

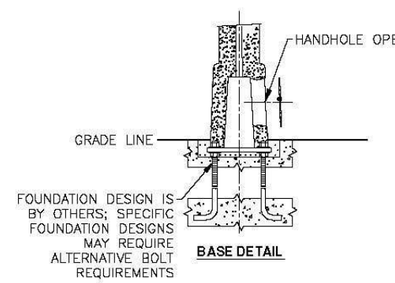

BASE DETAIL

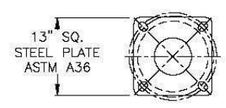

BASE PLATE DETAIL

DECORATIVE BASE ROUND POLE WITH BASEPLATE

POLE DESIG-NATION	POLE HEIGHT ABOVE GRADE	OVERALL POLE LENGTH	BOLT CIRCLE	BASE O.D.	ULTIMATE G.L. MOMENT (ft.-lbs.)	POLE WEIGHT (lbs.)
2B226	26'-4"	26'-7"	14"	11-3/4"	17,800	900

( ) POLES REQUIRED EACH WITH 8' ALUMINUM PIPE ARM ASSEMBLY, (P/N:2AP8DVP7A)

NOTES:
MIX (573I): BROWN CONCROCK, EXPOSED AGGREGATE FINISH, WITH AMERSHIELD ANTI-GRAFFITI COATING.

SEE DWG 1501-032 FOR MANUFACTURING DETAIL

APPROVED BY DATE

SKYE CANYON
LAS VEGAS, NEVADA
2B226 WITH 8' DOUBLE ARM

THIS DOCUMENT CONTAINS INFORMATION WHICH IS PROPRIETARY TO AMERON. IT SHALL NOT BE REPRODUCED, USED OR DISCLOSED TO ANYONE WITHOUT THE PRIOR WRITTEN PERMISSION OF AMERON.

AMERON POLE PRODUCTS

DRAWN: L.P.	DATE: 01/20/15	
SCALE: N.T.S.	DWG. NO. 1501-043	REV

COMPLIANCE TO ANY CODE NOT EXPLICITLY LISTED ON THIS DRAWING IS NOT GUARANTEED.
PLEASE CONTACT AMERON IF YOU HAVE ANY SPECIFIC CODE REQUIREMENTS

Ordering Number Logic

Scalable Specification Grade Cobrahead (ERS2)

E R S 2 _

PROD. ID	VOLTAGE	OPTICAL CODE	PHOTOMETRIC TYPE	DRIVE CURRENT	LED COLOR TEMP	PE FUNCTION	COLOR	OPTIONS
E = Evolve R = Roadway S = Scalable 2 = Double Module Optical Assembly	0 = 120-277* 1 = 120 2 = 208 3 = 240 4 = 277 H = 347-480* D = 347 5 = 480 * Fusing not available with Voltage "0" or "H"	Product Tier *3 = Specification Grade See Charts for all levels	A1 = Extra Narrow Asymmetric B1 = Narrow Asymmetric (Medium) C1 = Asymmetric (Short) D1 = Asymmetric Forward E1 = Asymmetric (Medium)	5 = 525mA 7 = 700mA 1 = 1050mA	30 = 3000K 40 = 4000K 50 = 5000K* NOTE: For 1050mA drive current, nominal color temperature (CCT) = 5300K	1 = None 2 = PE Receptacle 4 = PE Receptacle & Shorting Cap 5 = PE Receptacle & ANSI C136.1 PE Control A = ANSI C136.41-7-pin Dimming Receptacle D = ANSI C136.41-7-pin Dimming Receptacle with Shorting Cap	BLCK = Black GRAY = Gray RAL # 8011 Nut Brown	D = Wired Dimming E = External Bubble Level F = Fusing G = Internal Bubble Level L = Tool-Less Entry R = Additional Secondary Surge Protection Device T = GE Energy Extreme Surge Protection per IEEE/ANSI C62.41.2-2002. - Rating 1 - 10kV/5kA Location Category (120 events). - Rating 2 - 6kV/3kA Location Category C-Low (5000 events). XXX = Special Options

525 mA

PRODUCT ID	OPTICAL CODE	PHOTOMETRIC TYPE	DRIVE CURRENT	TYPICAL SYSTEM WATTAGE 120-277V	TYPICAL SYSTEM WATTAGE 347-480V	TYPICAL INITIAL LUMENS 3000K	TYPICAL INITIAL LUMENS 4000K & 5000K	BUG RATING 3000K	BUG RATING 4000K & 5000K	IES FILE NUMBERS 120-277V 3000K	IES FILE NUMBERS 120-277V 4000K	IES FILE NUMBERS 120-277V 5000K
D3			525mA	88	97	6700	8000	2-0-2	2-0-2	ERS2_D3A1530____-120-277V.IES	ERS2_D3A1540____-120-277V.IES	ERS2_D3A1550____-120-277V.IES
E3			525mA	99	109	7500	9100	2-0-2	3-0-2	ERS2_E3A1530____-120-277V.IES	ERS2_E3A1540____-120-277V.IES	ERS2_E3A1550____-120-277V.IES
F3		A1	525mA	112	123	8600	10300	2-0-2	3-0-2	ERS2_F3A1530____-120-277V.IES	ERS2_F3A1540____-120-277V.IES	ERS2_F3A1550____-120-277V.IES
G3			525mA	125	138	9600	11500	3-0-2	3-0-2	ERS2_G3A1530____-120-277V.IES	ERS2_G3A1540____-120-277V.IES	ERS2_G3A1550____-120-277V.IES
H3			525mA	138	152	10600	12700	3-0-2	3-0-3	ERS2_H3A1530____-120-277V.IES	ERS2_H3A1540____-120-277V.IES	ERS2_H3A1550____-120-277V.IES
D3			525mA	88	97	6900	8200	2-0-1	2-0-1	ERS2_D3B1530____-120-277V.IES	ERS2_D3B1540____-120-277V.IES	ERS2_D3B1550____-120-277V.IES
E3			525mA	99	109	7700	9300	2-0-1	2-0-1	ERS2_E3B1530____-120-277V.IES	ERS2_E3B1540____-120-277V.IES	ERS2_E3B1550____-120-277V.IES
E3		B1	525mA	112	123	8800	10600	2-0-1	3-0-2	ERS2_F3B1530____-120-277V.IES	ERS2_F3B1540____-120-277V.IES	ERS2_F3B1550____-120-277V.IES
G3			525mA	125	138	9800	11800	2-0-1	3-0-2	ERS2_G3B1530____-120-277V.IES	ERS2_G3B1540____-120-277V.IES	ERS2_G3B1550____-120-277V.IES
H3			525mA	138	152	10800	13000	3-0-2	3-0-2	ERS2_H3B1530____-120-277V.IES	ERS2_H3B1540____-120-277V.IES	ERS2_H3B1550____-120-277V.IES
D3			525mA	88	97	6900	8200	2-0-1	2-0-1	ERS2_D3C1530____-120-277V.IES	ERS2_D3C1540____-120-277V.IES	ERS2_D3C1550____-120-277V.IES
E3			525mA	99	109	7700	9300	2-0-1	2-0-1	ERS2_E3C1530____-120-277V.IES	ERS2_E3C1540____-120-277V.IES	ERS2_E3C1550____-120-277V.IES
F3		C1	525mA	112	123	8800	10600	2-0-1	3-0-1	ERS2_F3C1530____-120-277V.IES	ERS2_F3C1540____-120-277V.IES	ERS2_F3C1550____-120-277V.IES
G3			525mA	125	138	9800	11800	2-0-1	3-0-2	ERS2_G3C1530____-120-277V.IES	ERS2_G3C1540____-120-277V.IES	ERS2_G3C1550____-120-277V.IES
H3			525mA	138	152	10800	13000	3-0-2	3-0-2	ERS2_H3C1530____-120-277V.IES	ERS2_H3C1540____-120-277V.IES	ERS2_H3C1550____-120-277V.IES
D3			525mA	88	97	6700	8000	2-0-1	2-0-1	ERS2_D3D1530____-120-277V.IES	ERS2_D3D1540____-120-277V.IES	ERS2_D3D1550____-120-277V.IES
E3			525mA	99	109	7500	9100	2-0-1	2-0-2	ERS2_E3D1530____-120-277V.IES	ERS2_E3D1540____-120-277V.IES	ERS2_E3D1550____-120-277V.IES
F3		D1	525mA	112	123	8600	10300	2-0-2	2-0-2	ERS2_F3D1530____-120-277V.IES	ERS2_F3D1540____-120-277V.IES	ERS2_F3D1550____-120-277V.IES
G3			525mA	125	138	9600	11500	2-0-2	2-0-2	ERS2_G3D1530____-120-277V.IES	ERS2_G3D1540____-120-277V.IES	ERS2_G3D1550____-120-277V.IES
H3			525mA	138	152	10600	12700	2-0-2	3-0-2	ERS2_H3D1530____-120-277V.IES	ERS2_H3D1540____-120-277V.IES	ERS2_H3D1550____-120-277V.IES
D3			525mA	88	97	6900	8200	2-0-1	2-0-1	ERS2_D3E1530____-120-277V.IES	ERS2_D3E1540____-120-277V.IES	ERS2_D3E1550____-120-277V.IES
E3			525mA	99	109	7700	9300	2-0-1	2-0-2	ERS2_E3E1530____-120-277V.IES	ERS2_E3E1540____-120-277V.IES	ERS2_E3E1550____-120-277V.IES
F3		E1	525mA	112	123	8800	10600	2-0-1	3-0-2	ERS2_F3E1530____-120-277V.IES	ERS2_F3E1540____-120-277V.IES	ERS2_F3E1550____-120-277V.IES
G3			525mA	125	138	9800	11800	2-0-2	3-0-2	ERS2_G3E1530____-120-277V.IES	ERS2_G3E1540____-120-277V.IES	ERS2_G3E1550____-120-277V.IES
H3			525mA	138	152	10800	13000	3-0-2	3-0-2	ERS2_H3E1530____-120-277V.IES	ERS2_H3E1540____-120-277V.IES	ERS2_H3E1550____-120-277V.IES

NOTES:
- Max Operating Ambient 50° C
- Some 347-480V Not DLC Listed (Contact Manufacturer)
- For T Option Availability (Contact Manufacturer)

Lumen Maintenance

- Projected L92 (10K) ≥ 50,000 at Ta 25C
- Projected L70 (10K) > 100,000 at Ta 25C
  Based on 10,000h LM-80 data for Nichia 219B SQETMLH17005

Scalable Specification Grade Cobrahead (ERS2)

525 mA

PRODUCT ID	OPTICAL CODE	PHOTOMETRIC TYPE	DRIVE CURRENT	TYPICAL SYSTEM WATTAGE 120-277V	TYPICAL SYSTEM WATTAGE 347-480V	TYPICAL INITIAL LUMENS 3000K	TYPICAL INITIAL LUMENS 4000K & 5000K	BUG RATING 3000K	BUG RATING 4000K & 5000K	IES FILE NUMBERS 347-480V 3000K	IES FILE NUMBERS 347-480V 4000K	IES FILE NUMBERS 347-480V 5000K
	D3	A1	525mA	88	97	6700	8000	2-0-2	2-0-2	ERS2_D3A1530____-347-480V.IES	ERS2_D3A1540____-347-480V.IES	ERS2_D3A1550____-347-480V.IES
	E3		525mA	99	109	7500	9100	2-0-2	3-0-2	ERS2_E3A1530____-347-480V.IES	ERS2_E3A1540____-347-480V.IES	ERS2_E3A1550____-347-480V.IES
	F3		525mA	112	123	8600	10300	2-0-2	3-0-2	ERS2_F3A1530____-347-480V.IES	ERS2_F3A1540____-347-480V.IES	ERS2_F3A1550____-347-480V.IES
	G3		525mA	125	138	9600	11500	3-0-2	3-0-2	ERS2_G3A1530____-347-480V.IES	ERS2_G3A1540____-347-480V.IES	ERS2_G3A1550____-347-480V.IES
	H3		525mA	138	152	10600	12700	3-0-2	3-0-3	ERS2_H3A1530____-347-480V.IES	ERS2_H3A1540____-347-480V.IES	ERS2_H3A1550____-347-480V.IES
	D3	B1	525mA	88	97	6900	8200	2-0-1	2-0-1	ERS2_D3B1530____-347-480V.IES	ERS2_D3B1540____-347-480V.IES	ERS2_D3B1550____-347-480V.IES
	E3		525mA	99	109	7700	9300	2-0-1	2-0-1	ERS2_E3B1530____-347-480V.IES	ERS2_E3B1540____-347-480V.IES	ERS2_E3B1550____-347-480V.IES
	E3		525mA	112	123	8800	10600	2-0-1	3-0-2	ERS2_F3B1530____-347-480V.IES	ERS2_F3B1540____-347-480V.IES	ERS2_F3B1550____-347-480V.IES
	G3		525mA	125	138	9800	11800	2-0-1	3-0-2	ERS2_G3B1530____-347-480V.IES	ERS2_G3B1540____-347-480V.IES	ERS2_G3B1550____-347-480V.IES
	H3		525mA	138	152	10800	13000	3-0-2	3-0-2	ERS2_H3B1530____-347-480V.IES	ERS2_H3B1540____-347-480V.IES	ERS2_H3B1550____-347-480V.IES
	D3	C1	525mA	88	97	6900	8200	2-0-1	2-0-1	ERS2_D3C1530____-347-480V.IES	ERS2_D3C1540____-347-480V.IES	ERS2_D3C1550____-347-480V.IES
	E3		525mA	99	109	7700	9300	2-0-1	2-0-1	ERS2_E3C1530____-347-480V.IES	ERS2_E3C1540____-347-480V.IES	ERS2_E3C1550____-347-480V.IES
	F3		525mA	112	123	8800	10600	2-0-1	3-0-1	ERS2_F3C1530____-347-480V.IES	ERS2_F3C1540____-347-480V.IES	ERS2_F3C1550____-347-480V.IES
	G3		525mA	125	138	9800	11800	2-0-1	3-0-2	ERS2_G3C1530____-347-480V.IES	ERS2_G3C1540____-347-480V.IES	ERS2_G3C1550____-347-480V.IES
	H3		525mA	138	152	10800	13000	3-0-2	3-0-2	ERS2_H3C1530____-347-480V.IES	ERS2_H3C1540____-347-480V.IES	ERS2_H3C1550____-347-480V.IES
	D3	D1	525mA	88	97	6700	8000	2-0-1	2-0-1	ERS2_D3D1530____-347-480V.IES	ERS2_D3D1540____-347-480V.IES	ERS2_D3D1550____-347-480V.IES
	E3		525mA	99	109	7500	9100	2-0-1	2-0-2	ERS2_E3D1530____-347-480V.IES	ERS2_E3D1540____-347-480V.IES	ERS2_E3D1550____-347-480V.IES
	F3		525mA	112	123	8600	10300	2-0-2	2-0-2	ERS2_F3D1530____-347-480V.IES	ERS2_F3D1540____-347-480V.IES	ERS2_F3D1550____-347-480V.IES
	G3		525mA	125	138	9600	11500	2-0-2	2-0-2	ERS2_G3D1530____-347-480V.IES	ERS2_G3D1540____-347-480V.IES	ERS2_G3D1550____-347-480V.IES
	H3		525mA	138	152	10600	12700	2-0-2	3-0-2	ERS2_H3D1530____-347-480V.IES	ERS2_H3D1540____-347-480V.IES	ERS2_H3D1550____-347-480V.IES
	D3	E1	525mA	88	97	6900	8200	2-0-1	2-0-1	ERS2_D3E1530____-120-277V.IES	ERS2_D3E1540____-120-277V.IES	ERS2_D3E1550____-120-277V.IES
	E3		525mA	99	109	7700	9300	2-0-1	2-0-2	ERS2_E3E1530____-347-480V.IES	ERS2_E3E1540____-347-480V.IES	ERS2_E3E1550____-347-480V.IES
	F3		525mA	112	123	8800	10600	2-0-1	3-0-2	ERS2_F3E1530____-347-480V.IES	ERS2_F3E1540____-347-480V.IES	ERS2_F3E1550____-347-480V.IES
	G3		525mA	125	138	9800	11800	2-0-2	3-0-2	ERS2_G3E1530____-347-480V.IES	ERS2_G3E1540____-347-480V.IES	ERS2_G3E1550____-347-480V.IES
	H3		525mA	138	152	10800	13000	3-0-2	3-0-2	ERS2_H3E1530____-347-480V.IES	ERS2_H3E1540____-347-480V.IES	ERS2_H3E1550____-347-480V.IES

700 mA

PRODUCT ID	OPTICAL CODE	PHOTOMETRIC TYPE	DRIVE CURRENT	TYPICAL SYSTEM WATTAGE 120-277V	TYPICAL INITIAL LUMENS 3000K	TYPICAL INITIAL LUMENS 4000K & 5000K	BUG RATING 3000K	BUG RATING 4000K & 5000K	IES FILE NUMBERS 120-277V 3000K	IES FILE NUMBERS 120-277V 4000K	IES FILE NUMBERS 120-277V 5000K
	D3	A1	700mA	113	8100	9700	2-0-2	3-0-2	ERS2_D3A1730____-120-277V.IES	ERS2_D3A1740____-120-277V.IES	ERS2_D3A1750____-120-277V.IES
	E3		700mA	130	9400	11300	3-0-2	3-0-2	ERS2_E3A1730____-120-277V.IES	ERS2_E3A1740____-120-277V.IES	ERS2_E3A1750____-120-277V.IES
	F3		700mA	148	10600	12800	3-0-2	3-0-3	ERS2_F3A1730____-120-277V.IES	ERS2_F3A1740____-120-277V.IES	ERS2_F3A1750____-120-277V.IES
	G3		700mA	172	12000	14200	3-0-2	3-0-3	ERS2_G3A1730____-120-277V.IES	ERS2_G3A1740____-120-277V.IES	ERS2_G3A1750____-120-277V.IES
	H3		700mA	189	13300	15700	3-0-3	3-0-3	ERS2_H3A1730____-120-277V.IES	ERS2_H3A1740____-120-277V.IES	ERS2_H3A1750____-120-277V.IES
	D3	B1	700mA	113	8300	10000	2-0-1	3-0-1	ERS2_D3B1730____-120-277V.IES	ERS2_D3B1740____-120-277V.IES	ERS2_D3B1750____-120-277V.IES
	E3		700mA	130	9600	11600	2-0-1	3-0-2	ERS2_E3B1730____-120-277V.IES	ERS2_E3B1740____-120-277V.IES	ERS2_E3B1750____-120-277V.IES
	F3		700mA	148	10900	13100	3-0-2	3-0-2	ERS2_F3B1730____-120-277V.IES	ERS2_F3B1740____-120-277V.IES	ERS2_F3B1750____-120-277V.IES
	G3		700mA	172	12100	14600	3-0-2	3-0-2	ERS2_G3B1730____-120-277V.IES	ERS2_G3B1740____-120-277V.IES	ERS2_G3B1750____-120-277V.IES
	H3		700mA	189	13400	16100	3-0-2	3-0-2	ERS2_H3B1730____-120-277V.IES	ERS2_H3B1740____-120-277V.IES	ERS2_H3B1750____-120-277V.IES
	D3	C1	700mA	113	8300	10000	2-0-1	3-0-1	ERS2_D3C1730____-120-277V.IES	ERS2_D3C1740____-120-277V.IES	ERS2_D3C1750____-120-277V.IES
	E3		700mA	130	9600	11600	2-0-1	3-0-2	ERS2_E3C1730____-120-277V.IES	ERS2_E3C1740____-120-277V.IES	ERS2_E3C1750____-120-277V.IES
	F3		700mA	148	10900	13100	3-0-2	3-0-2	ERS2_F3C1730____-120-277V.IES	ERS2_F3C1740____-120-277V.IES	ERS2_F3C1750____-120-277V.IES
	G3		700mA	172	12100	14600	3-0-2	3-0-2	ERS2_G3C1730____-120-277V.IES	ERS2_G3C1740____-120-277V.IES	ERS2_G3C1750____-120-277V.IES
	H3		700mA	189	13400	16100	3-0-2	3-0-2	ERS2_H3C1730____-120-277V.IES	ERS2_H3C1740____-120-277V.IES	ERS2_H3C1750____-120-277V.IES
	D3	D1	700mA	113	8100	9700	2-0-2	2-0-2	ERS2_D3D1730____-120-277V.IES	ERS2_D3D1740____-120-277V.IES	ERS2_D3D1750____-120-277V.IES
	E3		700mA	130	9400	11300	2-0-2	2-0-2	ERS2_E3D1730____-120-277V.IES	ERS2_E3D1740____-120-277V.IES	ERS2_E3D1750____-120-277V.IES
	F3		700mA	148	10600	12800	2-0-2	3-0-2	ERS2_F3D1730____-120-277V.IES	ERS2_F3D1740____-120-277V.IES	ERS2_F3D1750____-120-277V.IES
	G3		700mA	172	12000	14200	2-0-2	3-0-2	ERS2_G3D1730____-120-277V.IES	ERS2_G3D1740____-120-277V.IES	ERS2_G3D1750____-120-277V.IES
	H3		700mA	189	13300	15700	3-0-2	3-0-2	ERS2_H3D1730____-120-277V.IES	ERS2_H3D1740____-120-277V.IES	ERS2_H3D1750____-120-277V.IES
	D3	E1	700mA	113	8300	10000	2-0-1	2-0-2	ERS2_D3E1730____-120-277V.IES	ERS2_D3E1740____-120-277V.IES	ERS2_D3E1750____-120-277V.IES
	E3		700mA	130	9600	11600	2-0-2	3-0-2	ERS2_E3E1730____-120-277V.IES	ERS2_E3E1740____-120-277V.IES	ERS2_E3E1750____-120-277V.IES
	F3		700mA	148	10900	13100	3-0-2	3-0-2	ERS2_F3E1730____-120-277V.IES	ERS2_F3E1740____-120-277V.IES	ERS2_F3E1750____-120-277V.IES
	G3		700mA	172	12100	14600	3-0-2	3-0-2	ERS2_G3E1730____-120-277V.IES	ERS2_G3E1740____-120-277V.IES	ERS2_G3E1750____-120-277V.IES
	H3		700mA	189	13400	16100	3-0-2	3-0-2	ERS2_H3E1730____-120-277V.IES	ERS2_H3E1740____-120-277V.IES	ERS2_H3E1750____-120-277V.IES

NOTES:
- Max Operating Ambient 50° C
- 347-480V Not Available in 700mA & 1050mA
- For T Option, Contact Manufacturer

Lumen Maintenance
- Projected L91 (10K) ≥ 50,000 at Ta 25C
- Projected L70 (10K) > 100,000 at Ta 25C
  Based on 10,000h LM-80 data for Nichia 219B SQETMLH17005

Product Dimensions

Evolve LED Scalable Specification Grade Cobrahead (ERS1)

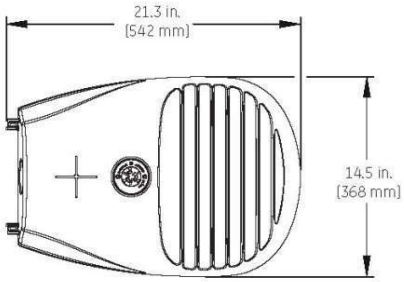

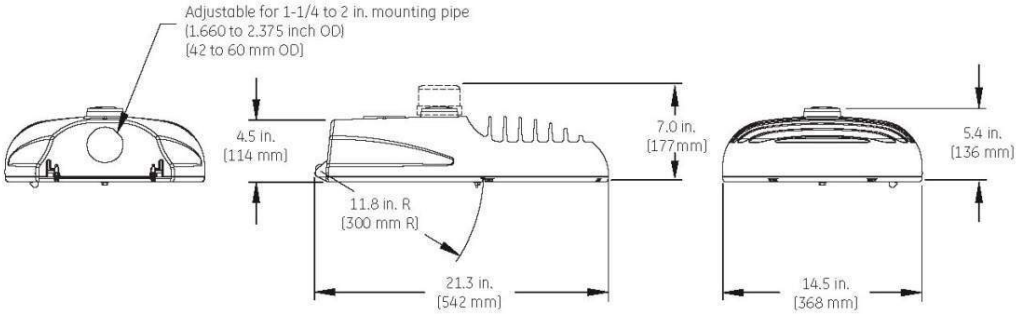

DATA

- Approximate Net Weight: 20 to 25 lbs. (9.07 to 11.34 kgs.) Contact manufacturer for specific configuration weight.
- Effective Projected Area (EPA): 0.5 sq. ft. max (0.046 sq. m)

Evolve LED Scalable Specification Grade Cobrahead (ERS2)

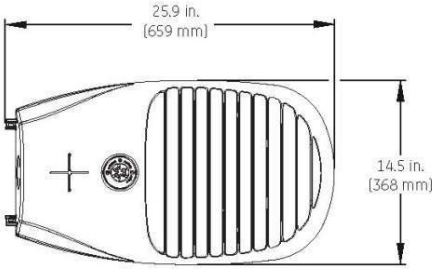

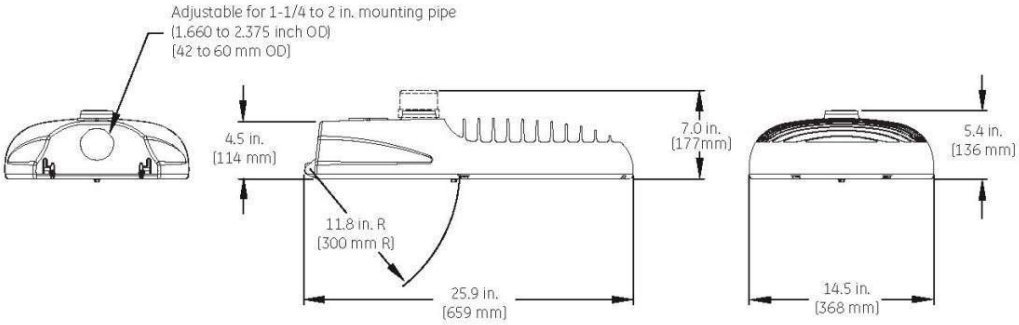

DATA

- Approximate Net Weight: 25 to 29 lbs. (11.34 to 13.15 kgs.) Contact manufacturer for specific configuration weight.
- Effective Projected Area (EPA): 0.7 sq. ft. max (0.065 sq. m)

Arterial Lane

REV.	DATE	DESCRIPTION	DRN.	APPR.

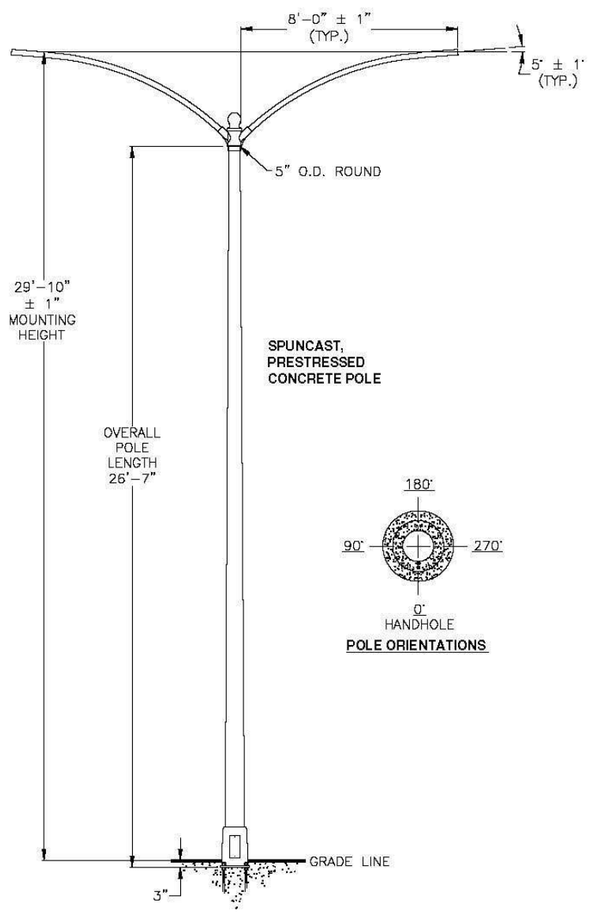

POLE ORIENTATIONS

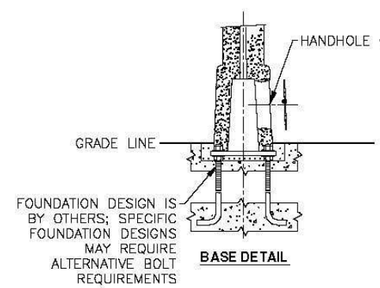

BASE DETAIL

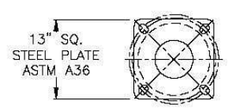

BASE PLATE DETAIL

DECORATIVE BASE ROUND POLE WITH BASEPLATE

POLE DESIG-NATION	POLE HEIGHT ABOVE GRADE	OVERALL POLE LENGTH	BOLT CIRCLE	BASE O.D.	ULTIMATE G.L. MOMENT (ft.-lbs.)	POLE WEIGHT (lbs.)
2B226	26'-4"	26'-7"	14"	11-3/4"	17,800	900

( ) POLES REQUIRED EACH WITH 8' ALUMINUM PIPE ARM ASSEMBLY, (P/N:2AP6DVP7A)

NOTES:
MIX (5731): BROWN CONCROCK, EXPOSED AGGREGATE FINISH, WITH AMERSHIELD ANTI-GRAFFITI COATING.

SEE DWG 1501-032 FOR MANUFACTURING DETAIL

APPROVED BY DATE

SKYE CANYON
LAS VEGAS, NEVADA
2B226 WITH 8' DOUBLE ARM

THIS DOCUMENT CONTAINS INFORMATION WHICH IS PROPRIETARY TO AMERON. IT SHALL NOT BE REPRODUCED, USED OR DISCLOSED TO ANYONE WITHOUT THE PRIOR WRITTEN PERMISSION OF AMERON.

AMERON POLE PRODUCTS

DRAWN: L.P.	DATE: 01/20/15	
SCALE: N.T.S.	DWG. NO. 1501-043	REV

COMPLIANCE TO ANY CODE NOT EXPLICITLY LISTED ON THIS DRAWING IS NOT GUARANTEED. PLEASE CONTACT AMERON IF YOU HAVE ANY SPECIFIC CODE REQUIREMENTS

Ordering Number Logic

Scalable Specification Grade Cobrahead (ERS3)

E R S 3 _ _ _ _ _ _ _ _ _ _ _ _ 5 _ _ _ _ _ _ _ _ _ _ _ _ _ _ _

PROD. ID	VOLTAGE	OPTICAL CODE	PHOTOMETRIC TYPE	DRIVE CURRENT	LED COLOR TEMP	PE FUNCTION	COLOR	OPTIONS
E = Evolve R = Roadway S = Scalable 3 = Triple Module Optical Assembly	0 = 120-277* 1 = 120 2 = 208 3 = 240 4 = 277 H = 347-480* D = 347 5 = 480 * Fusing not available with Voltage "0" or "H"	Product Tier *3 = Specification Grade See Charts for all levels	A1 = Extra Narrow Asymmetric B1 = Narrow Asymmetric (Medium) C1 = Asymmetric (Short) D1 = Asymmetric Forward E1 = Asymmetric (Medium)	5 = 525mA	30 = 3000K 40 = 4000K 50 = 5000K	1 = None 2 = PE Receptacle 4 = PE Receptacle & Shorting Cap 5 = PE Receptacle & ANSI C136.1 PE Control A = ANSI C136.41-7-pin Dimming Receptacle D = ANSI C136.41-7-pin Dimming Receptacle with Shorting Cap	BLCK = Black GRAY = Gray RAL # 8011 Nut Brown	D = Wired Dimming E = External Bubble Level F = Fusing G = Internal Bubble Level L = Tool-Less Entry R = Additional Secondary Surge Protection Device T = GE Energy Extreme Surge Protection per IEEE/ANSI C62.41.2-2002. - Rating 1 - 10kV/5kA Location Category (120 events). - Rating 2 - 6kV/3kA Location Category C-Low (5000 events). XXX = Special Options 076: House Side optic

525 mA

PRODUCT ID	OPTICAL CODE	PHOTOMETRIC TYPE	DRIVE CURRENT	TYPICAL SYSTEM WATTAGE 120-277V	TYPICAL SYSTEM WATTAGE 347-480V	TYPICAL INITIAL LUMENS 3000K	TYPICAL INITIAL LUMENS 4000K & 5000K	BUG RATING 3000K	BUG RATING 4000K & 5000K	IES FILE NUMBERS 120-277V 3000K	IES FILE NUMBERS 120-277V 4000K	IES FILE NUMBERS 120-277V 5000K
	J3		525mA	151	166	11700	14000	3-0-3	3-0-3	ERS3_J3A1530____-120-277V.IES	ERS3_J3A1540____-120-277V.IES	ERS3_J3A1550____-120-277V.IES
	K3		525mA	170	187	12700	15300	3-0-3	3-0-3	ERS3_K3A1530____-120-277V.IES	ERS3_K3A1540____-120-277V.IES	ERS3_K3A1550____-120-277V.IES
	L3	A1	525mA	183	201	13700	16500	3-0-3	3-0-3	ERS3_L3A1530____-120-277V.IES	ERS3_L3A1540____-120-277V.IES	ERS3_L3A1550____-120-277V.IES
	M3		525mA	196	216	14700	17700	3-0-3	3-0-3	ERS3_M3A1530____-120-277V.IES	ERS3_M3A1540____-120-277V.IES	ERS3_M3A1550____-120-277V.IES
	N3		525mA	209	230	15700	18900	3-0-3	3-0-3	ERS3_N3A1530____-120-277V.IES	ERS3_N3A1540____-120-277V.IES	ERS3_N3A1550____-120-277V.IES
	J3		525mA	151	166	12000	14400	3-0-2	3-0-2	ERS3_J3B1530____-120-277V.IES	ERS3_J3B1540____-120-277V.IES	ERS3_J3B1550____-120-277V.IES
	K3		525mA	170	187	13000	15600	3-0-2	3-0-2	ERS3_K3B1530____-120-277V.IES	ERS3_K3B1540____-120-277V.IES	ERS3_K3B1550____-120-277V.IES
	L3	B1	525mA	183	201	14000	16900	3-0-2	3-0-2	ERS3_L3B1530____-120-277V.IES	ERS3_L3B1540____-120-277V.IES	ERS3_L3B1550____-120-277V.IES
	M3		525mA	196	216	15100	18100	3-0-2	3-0-2	ERS3_M3B1530____-120-277V.IES	ERS3_M3B1540____-120-277V.IES	ERS3_M3B1550____-120-277V.IES
	N3		525mA	209	230	16100	19400	3-0-2	3-0-2	ERS3_N3B1530____-120-277V.IES	ERS3_N3B1540____-120-277V.IES	ERS3_N3B1550____-120-277V.IES
	J3		525mA	151	166	12000	14400	3-0-2	3-0-2	ERS3_J3C1530____-120-277V.IES	ERS3_J3C1540____-120-277V.IES	ERS3_J3C1550____-120-277V.IES
	K3		525mA	170	187	13000	15600	3-0-2	3-0-2	ERS3_K3C1530____-120-277V.IES	ERS3_K3C1540____-120-277V.IES	ERS3_K3C1550____-120-277V.IES
	L3	C1	525mA	183	201	14000	16900	3-0-2	3-0-2	ERS3_L3C1530____-120-277V.IES	ERS3_L3C1540____-120-277V.IES	ERS3_L3C1550____-120-277V.IES
	M3		525mA	196	216	15100	18100	3-0-2	3-0-2	ERS3_M3C1530____-120-277V.IES	ERS3_M3C1540____-120-277V.IES	ERS3_M3C1550____-120-277V.IES
	N3		525mA	209	230	16100	19400	3-0-2	3-0-2	ERS3_N3C1530____-120-277V.IES	ERS3_N3C1540____-120-277V.IES	ERS3_N3C1550____-120-277V.IES
	J3		525mA	151	166	11700	14000	2-0-2	3-0-2	ERS3_J3D1530____-120-277V.IES	ERS3_J3D1540____-120-277V.IES	ERS3_J3D1550____-120-277V.IES
	K3		525mA	170	187	12700	15300	3-0-2	3-0-2	ERS3_K3D1530____-120-277V.IES	ERS3_K3D1540____-120-277V.IES	ERS3_K3D1550____-120-277V.IES
	L3	D1	525mA	183	201	13700	16500	3-0-2	3-0-2	ERS3_L3D1530____-120-277V.IES	ERS3_L3D1540____-120-277V.IES	ERS3_L3D1550____-120-277V.IES
	M3		525mA	196	216	14700	17700	3-0-2	3-0-2	ERS3_M3D1530____-120-277V.IES	ERS3_M3D1540____-120-277V.IES	ERS3_M3D1550____-120-277V.IES
	N3		525mA	209	230	15700	18900	3-0-2	3-0-2	ERS3_N3D1530____-120-277V.IES	ERS3_N3D1540____-120-277V.IES	ERS3_N3D1550____-120-277V.IES
	J3		525mA	151	166	12000	14400	3-0-2	3-0-2	ERS3_J3E1530____-120-277V.IES	ERS3_J3E1540____-120-277V.IES	ERS3_J3E1550____-120-277V.IES
	K3		525mA	170	187	13000	15600	3-0-2	3-0-2	ERS3_K3E1530____-120-277V.IES	ERS3_K3E1540____-120-277V.IES	ERS3_K3E1550____-120-277V.IES
	L3	E1	525mA	183	201	14000	16900	3-0-2	3-0-2	ERS3_L3E1530____-120-277V.IES	ERS3_L3E1540____-120-277V.IES	ERS3_L3E1550____-120-277V.IES
	M3		525mA	196	216	15100	18100	3-0-2	3-0-2	ERS3_M3E1530____-120-277V.IES	ERS3_M3E1540____-120-277V.IES	ERS3_M3E1550____-120-277V.IES
	N3		525mA	209	230	16100	19400	3-0-2	3-0-2	ERS3_N3E1530____-120-277V.IES	ERS3_N3E1540____-120-277V.IES	ERS3_N3E1550____-120-277V.IES

NOTES:
- Max Operating Ambient 50° C
- Max Operating Ambient 45° C for 347-480V
- For T Option, Contact Manufacturer

Lumen Maintenance

- Projected L91 (10K) ≥ 50,000 at Ta 25C
- Projected L70 (10K) > 100,000 at Ta 25C
  Based on 10,000h LM-80 data for Nichia 219B SQETMLH17005

Scalable Specification Grade Cobrahead

525 mA

PRODUCT ID	OPTICAL CODE	PHOTOMETRIC TYPE	DRIVE CURRENT	TYPICAL SYSTEM WATTAGE 120-277V	TYPICAL SYSTEM WATTAGE 347-480V	TYPICAL INITIAL LUMENS 3000K	TYPICAL INITIAL LUMENS 4000K & 5000K	BUG RATING 3000K	BUG RATING 4000K & 5000K	IES FILE NUMBERS 347-480V 3000K	IES FILE NUMBERS 347-480V 4000K	IES FILE NUMBERS 347-480V 5000K
	D3	A1	525mA	88	97	6700	8000	2-0-2	2-0-2	ERS2_D3A1530____-347-480V.IES	ERS2_D3A1540____-347-480V.IES	ERS2_D3A1550____-347-480V.IES
	E3		525mA	99	109	7500	9100	2-0-2	3-0-2	ERS2_E3A1530____-347-480V.IES	ERS2_E3A1540____-347-480V.IES	ERS2_E3A1550____-347-480V.IES
	F3		525mA	112	123	8600	10300	2-0-2	3-0-2	ERS2_F3A1530____-347-480V.IES	ERS2_F3A1540____-347-480V.IES	ERS2_F3A1550____-347-480V.IES
	G3		525mA	125	138	9600	11500	3-0-2	3-0-2	ERS2_G3A1530____-347-480V.IES	ERS2_G3A1540____-347-480V.IES	ERS2_G3A1550____-347-480V.IES
	H3		525mA	138	152	10600	12700	3-0-2	3-0-3	ERS2_H3A1530____-347-480V.IES	ERS2_H3A1540____-347-480V.IES	ERS2_H3A1550____-347-480V.IES
	D3	B1	525mA	88	97	6900	8200	2-0-1	2-0-1	ERS2_D3B1530____-347-480V.IES	ERS2_D3B1540____-347-480V.IES	ERS2_D3B1550____-347-480V.IES
	E3		525mA	99	109	7700	9300	2-0-1	2-0-1	ERS2_E3B1530____-347-480V.IES	ERS2_E3B1540____-347-480V.IES	ERS2_E3B1550____-347-480V.IES
	E3		525mA	112	123	8800	10600	2-0-1	3-0-2	ERS2_F3B1530____-347-480V.IES	ERS2_F3B1540____-347-480V.IES	ERS2_F3B1550____-347-480V.IES
	G3		525mA	125	138	9800	11800	2-0-1	3-0-2	ERS2_G3B1530____-347-480V.IES	ERS2_G3B1540____-347-480V.IES	ERS2_G3B1550____-347-480V.IES
	H3		525mA	138	152	10800	13000	3-0-2	3-0-2	ERS2_H3B1530____-347-480V.IES	ERS2_H3B1540____-347-480V.IES	ERS2_H3B1550____-347-480V.IES
	D3	C1	525mA	88	97	6900	8200	2-0-1	2-0-1	ERS2_D3C1530____-347-480V.IES	ERS2_D3C1540____-347-480V.IES	ERS2_D3C1550____-347-480V.IES
	E3		525mA	99	109	7700	9300	2-0-1	2-0-1	ERS2_E3C1530____-347-480V.IES	ERS2_E3C1540____-347-480V.IES	ERS2_E3C1550____-347-480V.IES
	F3		525mA	112	123	8800	10600	2-0-1	3-0-1	ERS2_F3C1530____-347-480V.IES	ERS2_F3C1540____-347-480V.IES	ERS2_F3C1550____-347-480V.IES
	G3		525mA	125	138	9800	11800	2-0-1	3-0-2	ERS2_G3C1530____-347-480V.IES	ERS2_G3C1540____-347-480V.IES	ERS2_G3C1550____-347-480V.IES
	H3		525mA	138	152	10800	13000	3-0-2	3-0-2	ERS2_H3C1530____-347-480V.IES	ERS2_H3C1540____-347-480V.IES	ERS2_H3C1550____-347-480V.IES
	D3	D1	525mA	88	97	6700	8000	2-0-1	2-0-1	ERS2_D3D1530____-347-480V.IES	ERS2_D3D1540____-347-480V.IES	ERS2_D3D1550____-347-480V.IES
	E3		525mA	99	109	7500	9100	2-0-1	2-0-2	ERS2_E3D1530____-347-480V.IES	ERS2_E3D1540____-347-480V.IES	ERS2_E3D1550____-347-480V.IES
	F3		525mA	112	123	8600	10300	2-0-2	2-0-2	ERS2_F3D1530____-347-480V.IES	ERS2_F3D1540____-347-480V.IES	ERS2_F3D1550____-347-480V.IES
	G3		525mA	125	138	9600	11500	2-0-2	2-0-2	ERS2_G3D1530____-347-480V.IES	ERS2_G3D1540____-347-480V.IES	ERS2_G3D1550____-347-480V.IES
	H3		525mA	138	152	10600	12700	2-0-2	3-0-2	ERS2_H3D1530____-347-480V.IES	ERS2_H3D1540____-347-480V.IES	ERS2_H3D1550____-347-480V.IES
	D3	E1	525mA	88	97	6900	8200	2-0-1	2-0-1	ERS2_D3E1530____-120-277V.IES	ERS2_D3E1540____-120-277V.IES	ERS2_D3E1550____-120-277V.IES
	E3		525mA	99	109	7700	9300	2-0-1	2-0-2	ERS2_E3E1530____-347-480V.IES	ERS2_E3E1540____-347-480V.IES	ERS2_E3E1550____-347-480V.IES
	F3		525mA	112	123	8800	10600	2-0-1	3-0-2	ERS2_F3E1530____-347-480V.IES	ERS2_F3E1540____-347-480V.IES	ERS2_F3E1550____-347-480V.IES
	G3		525mA	125	138	9800	11800	2-0-2	3-0-2	ERS2_G3E1530____-347-480V.IES	ERS2_G3E1540____-347-480V.IES	ERS2_G3E1550____-347-480V.IES
	H3		525mA	138	152	10800	13000	3-0-2	3-0-2	ERS2_H3E1530____-347-480V.IES	ERS2_H3E1540____-347-480V.IES	ERS2_H3E1550____-347-480V.IES

NOTES:
- Max Operating Ambient 50° C
- 347-480V Not Available in 700mA & 1050mA
- For T Option, Contact Manufacturer

Lumen Maintenance
- Projected L91 (10K) ≥ 50,000 at Ta 25C
- Projected L70 (10K) > 100,000 at Ta 25C
  Based on 10,000h LM-80 data for Nichia 219B SQETMLH17005

Scalable Specification Grade Cobrahead

525 mA

PRODUCT ID	OPTICAL CODE	PHOTOMETRIC TYPE	DRIVE CURRENT	TYPICAL SYSTEM WATTAGE 120-277V	TYPICAL SYSTEM WATTAGE 347-480V	TYPICAL INITIAL LUMENS 3000K	TYPICAL INITIAL LUMENS 4000K & 5000K	BUG RATING 3000K	BUG RATING 4000K & 5000K	IES FILE NUMBERS 347-480V 3000K	IES FILE NUMBERS 347-480V 4000K	IES FILE NUMBERS 347-480V 5000K
	Z3	A1	525mA	31	34	2300	2700	1-0-1	1-0-1	ERS1_23A1530____347-480V.IES	ERS1_23A1540____347-480V.ies	ERS1_23A1550____347-480V.ies
	A3		525mA	45	50	3400	4000	1-0-1	1-0-1	ERS1_A3A1530____347-480V.IES	ERS1_A3A1540____347-480V.ies	ERS1_A3A1550____347-480V.ies
	B3		525mA	60	66	4500	5400	2-0-1	2-0-1	ERS1_B3A1530____347-480V.IES	ERS1_B3A1540____347-480V.ies	ERS1_B3A1550____347-480V.ies
	C3		525mA	73	80	5500	6600	2-0-1	2-0-2	ERS1_C3A1530____347-480V.IES	ERS1_C3A1540____347-480V.ies	ERS1_C3A1550____347-480V.ies
	Z3	B1	525mA	31	34	2300	2800	1-0-1	1-0-1	ERS1_23B1530____347-480V.IES	ERS1_23B1540____347-480V.ies	ERS1_23B1550____347-480V.ies
	A3		525mA	45	50	3500	4100	1-0-1	1-0-1	ERS1_A3B1530____347-480V.IES	ERS1_A3B1540____347-480V.ies	ERS1_A3B1550____347-480V.ies
	B3		525mA	60	66	4600	5500	1-0-1	2-0-1	ERS1_B3B1530____347-480V.IES	ERS1_B3B1540____347-480V.ies	ERS1_B3B1550____347-480V.ies
	C3		525mA	73	80	5600	6800	2-0-1	2-0-1	ERS1_C3B1530____347-480V.IES	ERS1_C3B1540____347-480V.ies	ERS1_C3B1550____347-480V.ies
	Z3	C1	525mA	31	34	2300	2800	1-0-1	1-0-1	ERS1_23C1530____347-480V.IES	ERS1_23C1540____347-480V.ies	ERS1_23C1550____347-480V.ies
	A3		525mA	45	50	3500	4100	1-0-1	1-0-1	ERS1_A3C1530____347-480V.IES	ERS1_A3C1540____347-480V.ies	ERS1_A3C1550____347-480V.ies
	B3		525mA	60	66	4600	5500	1-0-1	2-0-1	ERS1_B3C1530____347-480V.IES	ERS1_B3C1540____347-480V.ies	ERS1_B3C1550____347-480V.ies
	C3		525mA	73	80	5600	6800	2-0-1	2-0-1	ERS1_C3C1530____347-480V.IES	ERS1_C3C1540____347-480V.ies	ERS1_C3C1550____347-480V.ies
	Z3	D1	525mA	31	34	2300	2700	1-0-1	1-0-1	ERS1_23D1530____347-480V.IES	ERS1_23D1540____347-480V.ies	ERS1_23D1550____347-480V.ies
	A3		525mA	45	50	3400	4000	1-0-1	1-0-1	ERS1_A3D1530____347-480V.IES	ERS1_A3D1540____347-480V.ies	ERS1_A3D1550____347-480V.ies
	B3		525mA	60	66	4500	5400	1-0-1	1-0-1	ERS1_B3D1530____347-480V.IES	ERS1_B3D1540____347-480V.ies	ERS1_B3D1550____347-480V.ies
	C3		525mA	73	80	5500	6600	1-0-1	2-0-1	ERS1_C3D1530____347-480V.IES	ERS1_C3D1540____347-480V.ies	ERS1_C3D1550____347-480V.ies
	Z3	E1	525mA	31	34	2300	2800	1-0-0	1-0-1	ERS1_23E1530____347-480V.IES	ERS1_23E1540____347-480V.ies	ERS1_23E1550____347-480V.ies
	A3		525mA	45	50	3500	4100	1-0-1	1-0-1	ERS1_A3E1530____347-480V.IES	ERS1_A3E1540____347-480V.ies	ERS1_A3E1550____347-480V.ies
	B3		525mA	60	66	4600	5500	1-0-1	2-0-1	ERS1_B3E1530____347-480V.IES	ERS1_B3E1540____347-480V.ies	ERS1_B3E1550____347-480V.ies
	C3		525mA	73	80	5600	6800	2-0-1	2-0-1	ERS1_C3E1530____347-480V.IES	ERS1_C3E1540____347-480V.ies	ERS1_C3E1550____347-480V.ies

NOTES:
- Max Operating Ambient 50° C
- 347-480V Not Available in 700mA & 1050mA
- For T Option (Contact Manufacturer)

Lumen Maintenance

- Projected L91 (10K) ≥ 50,000 at Ta 25C
- Projected L70 (10K) > 100,000 at Ta 25C
  Based on 10,000h LM-80 data for Nichia 219B SQETMLH17005

Major Lane

REV.	DATE	DESCRIPTION	DRN.	APPR.

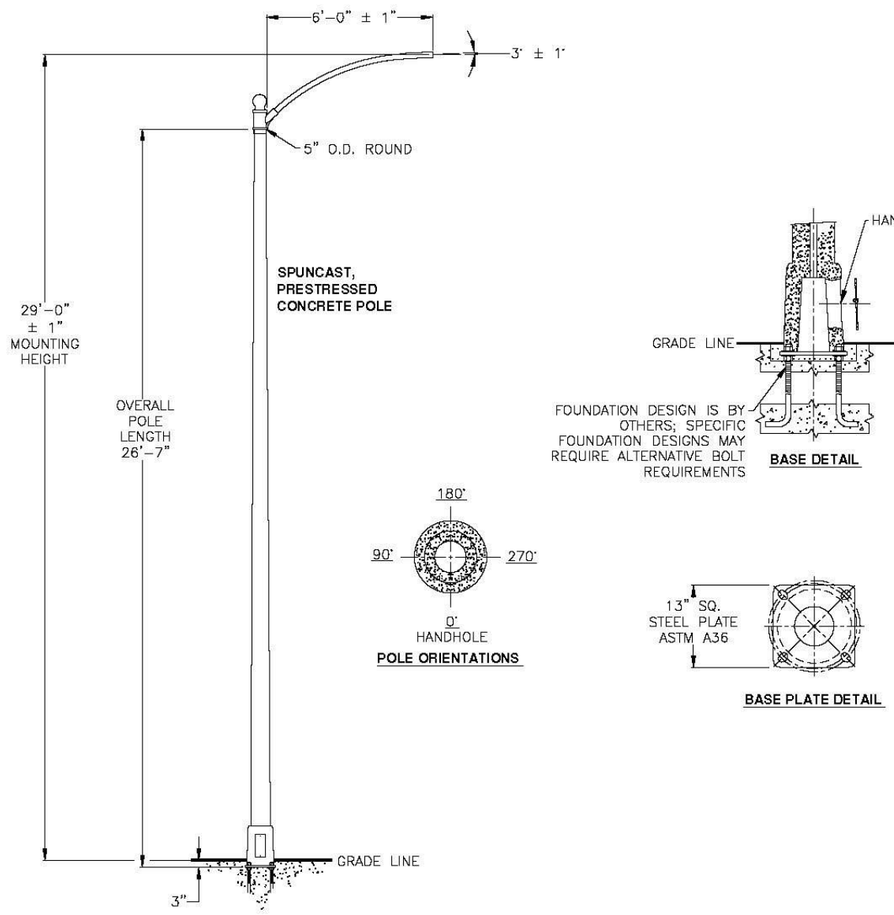

DECORATIVE BASE ROUND POLE WITH BASEPLATE

POLE DESIG–NATION	POLE HEIGHT ABOVE GRADE	OVERALL POLE LENGTH	BOLT CIRCLE	BASE O.D.	ULTIMATE G.L. MOMENT (ft.–lbs.)	POLE WEIGHT (lbs.)
2B226	26'–4"	26'–7"	14"	11–3/4"	17,800	900

( ) POLES REQUIRED EACH WITH 6' ALUMINUM PIPE ARM ASSEMBLY, (P/N: 2AP6VP7A)

NOTES:
MIX (5731): BROWN CONCROCK, EXPOSED AGGREGATE FINISH, WITH AMERSHIELD ANTI-GRAFFITI COATING.

SEE DWG 1412-015 FOR MANUFACTURING DETAIL

APPROVED BY DATE

SKYE CANYON
LAS VEGAS, NEVADA
2B226 WITH 6'SINGLE ARM

THIS DOCUMENT CONTAINS INFORMATION WHICH IS PROPRIETARY TO AMERON. IT SHALL NOT BE REPRODUCED, USED OR DISCLOSED TO ANYONE WITHOUT THE PRIOR WRITTEN PERMISSION OF AMERON.

AMERON POLE PRODUCTS

DRAWN: L.P.	DATE: 01/20/15	
SCALE: N.T.S.	DWG. NO. 1501–042	REV

Ordering Number Logic

Scalable Specification Grade Cobrahead (ERS2)

E R S 2
_ _

PROD. ID	VOLTAGE	OPTICAL CODE	PHOTOMETRIC TYPE	DRIVE CURRENT	LED COLOR TEMP	PE FUNCTION	COLOR	OPTIONS
E = Evolve R = Roadway S = Scalable 2 = Double Module Optical Assembly	0 = 120-277* 1 = 120 2 = 208 3 = 240 4 = 277 H = 347-480* D = 347 5 = 480 * Fusing not available with Voltage "0" or "H"	Product Tier *3 = Specification Grade See Charts for all levels	A1 = Extra Narrow Asymmetric B1 = Narrow Asymmetric (Medium) C1 = Asymmetric (Short) D1 = Asymmetric Forward E1 = Asymmetric (Medium)	5 = 525mA 7 = 700mA 1 = 1050mA	30 = 3000K 40 = 4000K 50 = 5000K* NOTE: For 1050mA drive current, nominal color temperature (CCT) = 5300K	1 = None 2 = PE Receptacle 4 = PE Receptacle & Shorting Cap 5 = PE Receptacle & ANSI C136.1 PE Control A = ANSI C136.41-7-pin Dimming Receptacle D = ANSI C136.41-7-pin Dimming Receptacle with Shorting Cap	BLCK = Black GRAY = Gray RAL # 8011 Nut Brown	D = Wired Dimming E = External Bubble Level F = Fusing G = Internal Bubble Level L = Tool-Less Entry R = Additional Secondary Surge Protection Device T = GE Energy Extreme Surge Protection per IEEE/ANSI C 62.41.2-2002. - Rating 1 - 10kV/5kA Location Category (120 events). - Rating 2 - 6kV/3kA Location Category C-Low (5000 events). XXX = Special Options 112: House Side Optic

525 mA

PRODUCT ID	OPTICAL CODE	PHOTOMETRIC TYPE	DRIVE CURRENT	TYPICAL SYSTEM WATTAGE 120-277V	TYPICAL SYSTEM WATTAGE 347-480V	TYPICAL INITIAL LUMENS 3000K	TYPICAL INITIAL LUMENS 4000K & 5000K	BUG RATING 3000K	BUG RATING 4000K & 5000K	IES FILE NUMBERS 120-277V 3000K	IES FILE NUMBERS 120-277V 4000K	IES FILE NUMBERS 120-277V 5000K
	D3	A1	525mA	88	97	6700	8000	2-0-2	2-0-2	ERS2_03A1530____-120-277V.IES	ERS2_03A1540____-120-277V.IES	ERS2_03A1550____-120-277V.IES
	E3		525mA	99	109	7500	9100	2-0-2	3-0-2	ERS2_E3A1530____-120-277V.IES	ERS2_E3A1540____-120-277V.IES	ERS2_E3A1550____-120-277V.IES
	F3		525mA	112	123	8600	10300	2-0-2	3-0-2	ERS2_F3A1530____-120-277V.IES	ERS2_F3A1540____-120-277V.IES	ERS2_F3A1550____-120-277V.IES
	G3		525mA	125	138	9600	11500	3-0-2	3-0-2	ERS2_G3A1530____-120-277V.IES	ERS2_G3A1540____-120-277V.IES	ERS2_G3A1550____-120-277V.IES
	H3		525mA	138	152	10600	12700	3-0-2	3-0-3	ERS2_H3A1530____-120-277V.IES	ERS2_H3A1540____-120-277V.IES	ERS2_H3A1550____-120-277V.IES
	D3	B1	525mA	88	97	6900	8200	2-0-1	2-0-1	ERS2_03B1530____-120-277V.IES	ERS2_03B1540____-120-277V.IES	ERS2_03B1550____-120-277V.IES
	E3		525mA	99	109	7700	9300	2-0-1	2-0-1	ERS2_E3B1530____-120-277V.IES	ERS2_E3B1540____-120-277V.IES	ERS2_E3B1550____-120-277V.IES
	E3		525mA	112	123	8800	10600	2-0-1	3-0-2	ERS2_F3B1530____-120-277V.IES	ERS2_F3B1540____-120-277V.IES	ERS2_F3B1550____-120-277V.IES
	G3		525mA	125	138	9800	11800	2-0-1	3-0-2	ERS2_G3B1530____-120-277V.IES	ERS2_G3B1540____-120-277V.IES	ERS2_G3B1550____-120-277V.IES
	H3		525mA	138	152	10800	13000	3-0-2	3-0-2	ERS2_H3B1530____-120-277V.IES	ERS2_H3B1540____-120-277V.IES	ERS2_H3B1550____-120-277V.IES
	D3	C1	525mA	88	97	6900	8200	2-0-1	2-0-1	ERS2_03C1530____-120-277V.IES	ERS2_03C1540____-120-277V.IES	ERS2_03C1550____-120-277V.IES
	E3		525mA	99	109	7700	9300	2-0-1	2-0-1	ERS2_E3C1530____-120-277V.IES	ERS2_E3C1540____-120-277V.IES	ERS2_E3C1550____-120-277V.IES
	F3		525mA	112	123	8800	10600	2-0-1	3-0-1	ERS2_F3C1530____-120-277V.IES	ERS2_F3C1540____-120-277V.IES	ERS2_F3C1550____-120-277V.IES
	G3		525mA	125	138	9800	11800	2-0-1	3-0-2	ERS2_G3C1530____-120-277V.IES	ERS2_G3C1540____-120-277V.IES	ERS2_G3C1550____-120-277V.IES
	H3		525mA	138	152	10800	13000	3-0-2	3-0-2	ERS2_H3C1530____-120-277V.IES	ERS2_H3C1540____-120-277V.IES	ERS2_H3C1550____-120-277V.IES
	D3	D1	525mA	88	97	6700	8000	2-0-1	2-0-1	ERS2_03D1530____-120-277V.IES	ERS2_03D1540____-120-277V.IES	ERS2_03D1550____-120-277V.IES
	E3		525mA	99	109	7500	9100	2-0-1	2-0-2	ERS2_E3D1530____-120-277V.IES	ERS2_E3D1540____-120-277V.IES	ERS2_E3D1550____-120-277V.IES
	F3		525mA	112	123	8600	10300	2-0-2	2-0-2	ERS2_F3D1530____-120-277V.IES	ERS2_F3D1540____-120-277V.IES	ERS2_F3D1550____-120-277V.IES
	G3		525mA	125	138	9600	11500	2-0-2	2-0-2	ERS2_G3D1530____-120-277V.IES	ERS2_G3D1540____-120-277V.IES	ERS2_G3D1550____-120-277V.IES
	H3		525mA	138	152	10600	12700	2-0-2	3-0-2	ERS2_H3D1530____-120-277V.IES	ERS2_H3D1540____-120-277V.IES	ERS2_H3D1550____-120-277V.IES
	D3	E1	525mA	88	97	6900	8200	2-0-1	2-0-1	ERS2_03E1530____-120-277V.IES	ERS2_03E1540____-120-277V.IES	ERS2_03E1550____-120-277V.IES
	E3		525mA	99	109	7700	9300	2-0-1	2-0-2	ERS2_E3E1530____-120-277V.IES	ERS2_E3E1540____-120-277V.IES	ERS2_E3E1550____-120-277V.IES
	F3		525mA	112	123	8800	10600	2-0-1	3-0-2	ERS2_F3E1530____-120-277V.IES	ERS2_F3E1540____-120-277V.IES	ERS2_F3E1550____-120-277V.IES
	G3		525mA	125	138	9800	11800	2-0-2	3-0-2	ERS2_G3E1530____-120-277V.IES	ERS2_G3E1540____-120-277V.IES	ERS2_G3E1550____-120-277V.IES
	H3		525mA	138	152	10800	13000	3-0-2	3-0-2	ERS2_H3E1530____-120-277V.IES	ERS2_H3E1540____-120-277V.IES	ERS2_H3E1550____-120-277V.IES

NOTES:
- Max Operating Ambient 50° C
- Some 347-480V Not DLC Listed (Contact Manufacturer)
- For T Option Availability (Contact Manufacturer)

Lumen Maintenance

- Projected L92 (10K) ≥ 50,000 at Ta 25C
- Projected L70 (10K) > 100,000 at Ta 25C
  Based on 10,000h LM-80 data for Nichia 219B SQETMLH17005

Scalable Specification Grade Cobrahead

525 mA PRODUCT ID	OPTICAL CODE	PHOTOMETRIC TYPE	DRIVE CURRENT	TYPICAL SYSTEM WATTAGE 120-277V	TYPICAL SYSTEM WATTAGE 347-480V	TYPICAL INITIAL LUMENS 3000K	TYPICAL INITIAL LUMENS 4000K & 5000K	BUG RATING 3000K	BUG RATING 4000K & 5000K	IES FILE NUMBERS 347-480V 3000K	IES FILE NUMBERS 347-480V 4000K	IES FILE NUMBERS 347-480V 5000K
	23	A1	525mA	31	34	2300	2700	1-0-1	1-0-1	ERS1_23A1530____347-480V.IES	ERS1_23A1540____347-480V.ies	ERS1_23A1550____347-480V.ies
	A3		525mA	45	50	3400	4000	1-0-1	1-0-1	ERS1_A3A1530____347-480V.IES	ERS1_A3A1540____347-480V.ies	ERS1_A3A1550____347-480V.ies
	B3		525mA	60	66	4500	5400	2-0-1	2-0-1	ERS1_B3A1530____347-480V.IES	ERS1_B3A1540____347-480V.ies	ERS1_B3A1550____347-480V.ies
	C3		525mA	73	80	5500	6600	2-0-1	2-0-2	ERS1_C3A1530____347-480V.IES	ERS1_C3A1540____347-480V.ies	ERS1_C3A1550____347-480V.ies
	23	B1	525mA	31	34	2300	2800	1-0-1	1-0-1	ERS1_23B1530____347-480V.IES	ERS1_23B1540____347-480V.ies	ERS1_23B1550____347-480V.ies
	A3		525mA	45	50	3500	4100	1-0-1	1-0-1	ERS1_A3B1530____347-480V.IES	ERS1_A3B1540____347-480V.ies	ERS1_A3B1550____347-480V.ies
	B3		525mA	60	66	4600	5500	1-0-1	2-0-1	ERS1_B3B1530____347-480V.IES	ERS1_B3B1540____347-480V.ies	ERS1_B3B1550____347-480V.ies
	C3		525mA	73	80	5600	6800	2-0-1	2-0-1	ERS1_C3B1530____347-480V.IES	ERS1_C3B1540____347-480V.ies	ERS1_C3B1550____347-480V.ies
	23	C1	525mA	31	34	2300	2800	1-0-1	1-0-1	ERS1_23C1530____347-480V.IES	ERS1_23C1540____347-480V.ies	ERS1_23C1550____347-480V.ies
	A3		525mA	45	50	3500	4100	1-0-1	1-0-1	ERS1_A3C1530____347-480V.IES	ERS1_A3C1540____347-480V.ies	ERS1_A3C1550____347-480V.ies
	B3		525mA	60	66	4600	5500	1-0-1	2-0-1	ERS1_B3C1530____347-480V.IES	ERS1_B3C1540____347-480V.ies	ERS1_B3C1550____347-480V.ies
	C3		525mA	73	80	5600	6800	2-0-1	2-0-1	ERS1_C3C1530____347-480V.IES	ERS1_C3C1540____347-480V.ies	ERS1_C3C1550____347-480V.ies
	23	D1	525mA	31	34	2300	2700	1-0-1	1-0-1	ERS1_23D1530____347-480V.IES	ERS1_23D1540____347-480V.ies	ERS1_23D1550____347-480V.ies
	A3		525mA	45	50	3400	4000	1-0-1	1-0-1	ERS1_A3D1530____347-480V.IES	ERS1_A3D1540____347-480V.ies	ERS1_A3D1550____347-480V.ies
	B3		525mA	60	66	4500	5400	1-0-1	1-0-1	ERS1_B3D1530____347-480V.IES	ERS1_B3D1540____347-480V.ies	ERS1_B3D1550____347-480V.ies
	C3		525mA	73	80	5500	6600	1-0-1	2-0-1	ERS1_C3D1530____347-480V.IES	ERS1_C3D1540____347-480V.ies	ERS1_C3D1550____347-480V.ies
	23	E1	525mA	31	34	2300	2800	1-0-0	1-0-1	ERS1_23E1530____347-480V.IES	ERS1_23E1540____347-480V.ies	ERS1_23E1550____347-480V.ies
	A3		525mA	45	50	3500	4100	1-0-1	1-0-1	ERS1_A3E1530____347-480V.IES	ERS1_A3E1540____347-480V.ies	ERS1_A3E1550____347-480V.ies
	B3		525mA	60	66	4600	5500	1-0-1	2-0-1	ERS1_B3E1530____347-480V.IES	ERS1_B3E1540____347-480V.ies	ERS1_B3E1550____347-480V.ies
	C3		525mA	73	80	5600	6800	2-0-1	2-0-1	ERS1_C3E1530____347-480V.IES	ERS1_C3E1540____347-480V.ies	ERS1_C3E1550____347-480V.ies

NOTES:
- Max Operating Ambient 50° C
- 347-480V Not Available in 700mA & 1050mA
- For T Option (Contact Manufacturer)

Lumen Maintenance

- Projected L91 (10K) ≥ 50,000 at Ta 25C
- Projected L70 (10K) > 100,000 at Ta 25C
  Based on 10,000h LM-80 data for Nichia 219B SQETMLH17005

Product Dimensions

Evolve LED Scalable Specification Grade Cobrahead (ERS1)

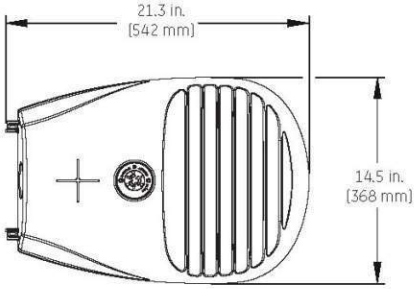

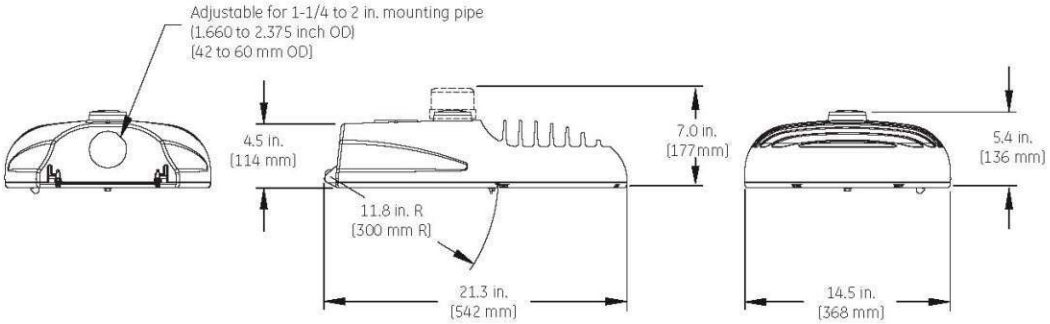

DATA

- Approximate Net Weight: 20 to 25 lbs. (9.07 to 11.34 kgs.) Contact manufacturer for specific configuration weight.
- Effective Projected Area (EPA): 0.5 sq. ft. max (0.046 sq. m)

Evolve LED Scalable Specification Grade Cobrahead (ERS2)

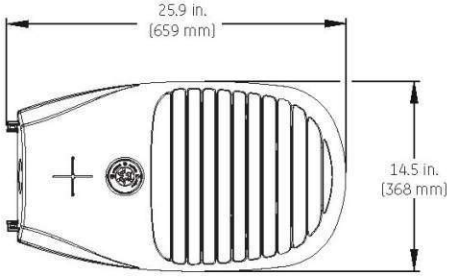

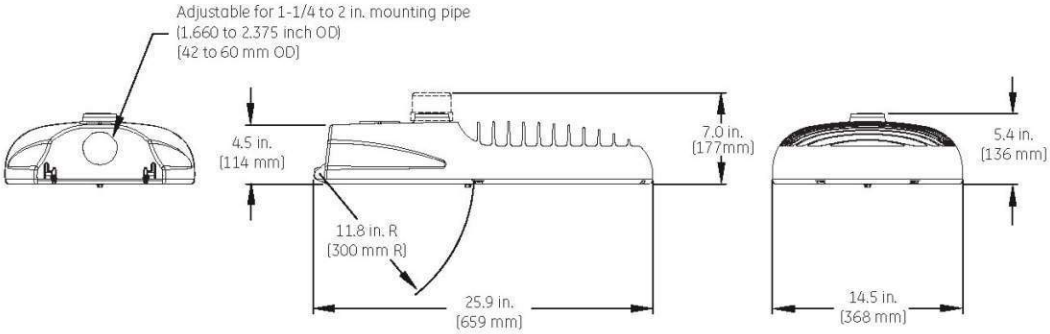

DATA

- Approximate Net Weight: 25 to 29 lbs. (11.34 to 13.15 kgs.) Contact manufacturer for specific configuration weight.
- Effective Projected Area (EPA): 0.7 sq. ft. max (0.065 sq. m)

EXHIBIT N
Revised February 6, 2015, Second Revision April 15, 2015

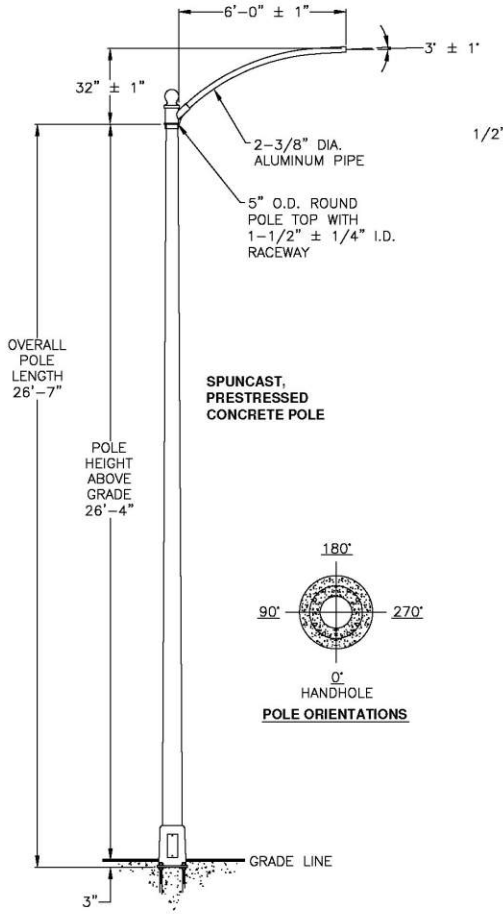

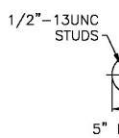

POLE TOP / STUD DETAIL

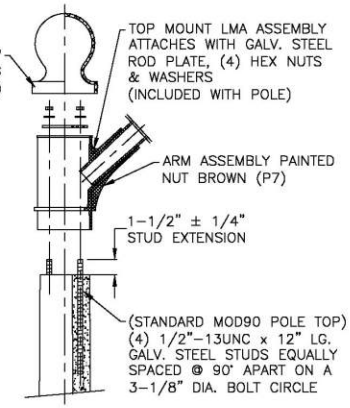

TOP MOUNT DETAILS

POLE ORIENTATIONS

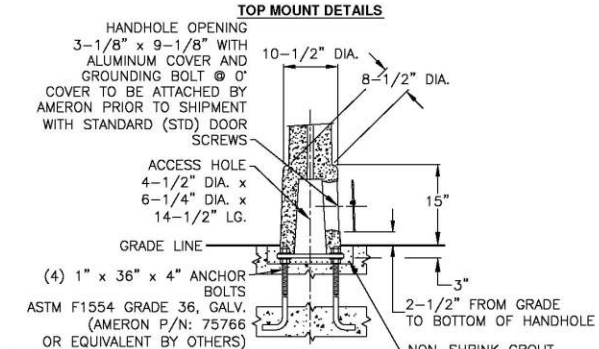

BASE DETAIL

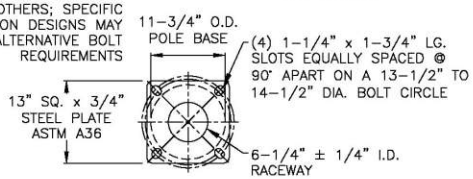

BASE PLATE DETAIL

REV.	DATE	DESCRIPTION	DRN.	APPR.

"F" LEVEL CONFIG CODES		
OPTION CLASS	ENTRY	INFO.
COATING	I	
HH COVER	41373	LV
DOOR SCRS	STD	

"P" LEVEL CONFIG CODES		
OPTION CLASS	ENTRY	INFO.
MIX	57	
FINISH	3	
BASEPLATE	45198	NOTE 10
POLE TOP CON.	MOD90	

DECORATIVE BASE ROUND POLE WITH BASEPLATE

POLE DESIG-NATION	POLE HEIGHT ABOVE GRADE	OVERALL POLE LENGTH	BOLT CIRCLE	BASE O.D.	ULTIMATE G.L. MOMENT (ft.-lbs.)	POLE WEIGHT (lbs.)
2B226	26'-4"	26'-7"	14"	11-3/4"	17,800	900

( ) POLES REQUIRED EACH WITH 6' ALUMINUM PIPE ARM ASSEMBLY, (P/N: 2AP6VP7A)

NOTES:

1. MIX (573I): BROWN CONCROCK, EXPOSED AGGREGATE FINISH, WITH AMERSHIELD ANTI-GRAFFITI COATING.
2. ASTM C-150 TYPE III GRAY CEMENT.
3. f'c @ 28 DAYS = 6,000 PSI, USING SPUN CYLINDER TEST.
4. f'c @ 28 DAYS = 5,000 PSI, USING ASTM C-31 CYLINDER TEST.
5. POLES MANUFACTURED PER ASTM C-1089-13 SPECIFICATIONS.
6. PROTECTIVE COAT EXPOSED P.C. WIRES AT POLE ENDS.
7. BASEPLATE PRESTRESSED WITH (4) 5/16" DIA. A-416 (7 STRAND) CABLES.
8. THE ARM ASSEMBLY MAY BE ROTATED TO ANY ORIENTATION PER CUSTOMER'S REQUIREMENTS.
9. THE SINGLE 6' LUMINAIRE MAST ARM (NOT TO EXCEED 2.1 SQ. FT. EPA, 20 LBS) DEPICTED ON THIS DRAWING IS DESIGNED TO WITHSTAND THE LOADS IMPARTED BY A SINGLE ARM END TYPE LUMINAIRE (NOT TO EXCEED 2.5 SQ. FT. EPA, 50 LBS.); THE POLE DEPICTED IS DESIGNED TO WITHSTAND THE LOADS IMPARTED BY THE SINGLE ARM AND THE SINGLE LUMINAIRE, AS DESIGNED PER THE 2013 AASHTO LTS-6 USING A 90 MPH WIND ZONE (3-SECOND GUSTS) CRITERIA FOR STREET LIGHT POLES. PLEASE CONTACT & ADVISE AMERON ENGINEERING IF THE INTENDED LOADING EXCEEDS THESE VALUES.
10. POLE SHOWN IS SUITABLE FOR CAPPED BASEPLATE (ENCASED IN CONCRETE), OTHERWISE, OTHER NON-CAPPED INSTALLATION REQUIRES A GALVANIZED BASEPLATE.

APPROVED BY **DATE**

SKY CANYON
NEVADA
2B226 WITH 6' SINGLE ARM

THIS DOCUMENT CONTAINS INFORMATION WHICH IS PROPRIETARY TO AMERON. IT SHALL NOT BE REPRODUCED, USED OR DISCLOSED TO ANYONE WITHOUT THE PRIOR WRITTEN PERMISSION OF AMERON.

AMERON POLE PRODUCTS

DRAWN: L.P.	DATE: 12/11/14	
SCALE: N.T.S.	DWG. NO. 1412-015	REV

COMPLIANCE TO ANY CODE NOT EXPLICITLY LISTED ON THIS DRAWING IS NOT GUARANTEED. PLEASE CONTACT AMERON IF YOU HAVE ANY SPECIFIC CODE REQUIREMENTS

Minor Lane with Sidewalk

REV.	DATE	DESCRIPTION	DRN.	APPR.

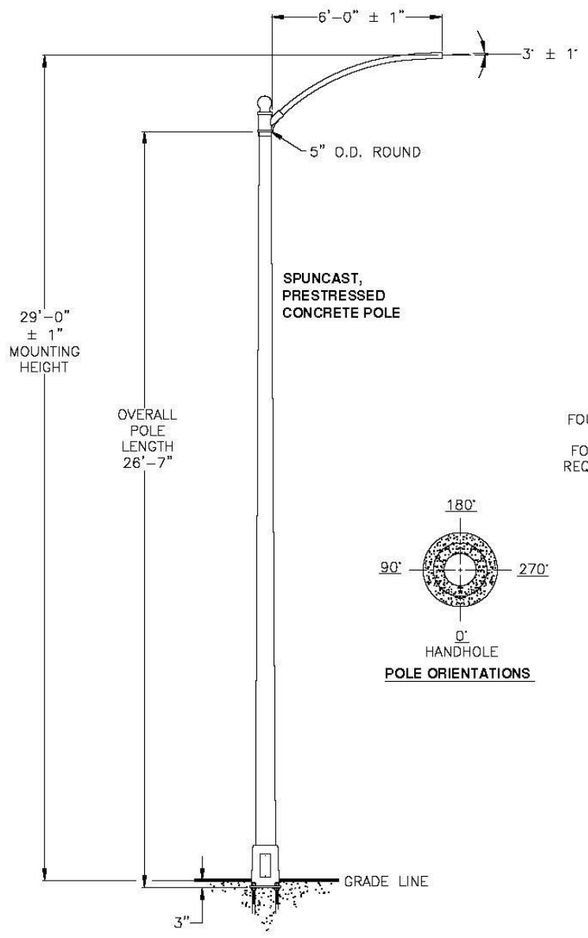

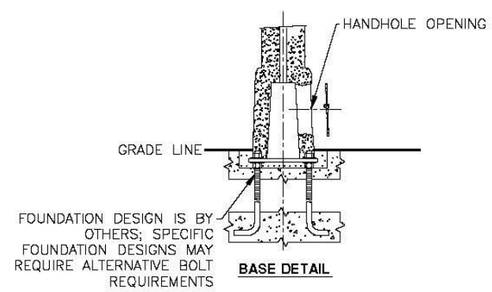

BASE DETAIL

POLE ORIENTATIONS

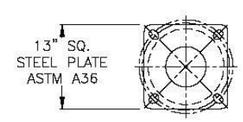

BASE PLATE DETAIL

DECORATIVE BASE ROUND POLE WITH BASEPLATE

POLE DESIG-NATION	POLE HEIGHT ABOVE GRADE	OVERALL POLE LENGTH	BOLT CIRCLE	BASE O.D.	ULTIMATE G.L. MOMENT (ft.-lbs.)	POLE WEIGHT (lbs.)
2B226	26'-4"	26'-7"	14"	11-3/4"	17,800	900

( ) POLES REQUIRED EACH WITH 6' ALUMINUM PIPE ARM ASSEMBLY, (P/N: 2AP6VP7A)

NOTES:
MIX (573I): BROWN CONCROCK, EXPOSED AGGREGATE FINISH, WITH AMERSHIELD ANTI-GRAFFITI COATING.

SEE DWG 1412-015 FOR MANUFACTURING DETAIL

APPROVED BY DATE

SKYE CANYON
LAS VEGAS, NEVADA
2B226 WITH 6'SINGLE ARM

THIS DOCUMENT CONTAINS INFORMATION WHICH IS PROPRIETARY TO AMERON. IT SHALL NOT BE REPRODUCED, USED OR DISCLOSED TO ANYONE WITHOUT THE PRIOR WRITTEN PERMISSION OF AMERON.

AMERON POLE PRODUCTS

DRAWN: L.P.	DATE: 01/20/15	
SCALE: N.T.S.	DWG. NO. 1501-042	REV

EXHIBIT N

Revised February 6, 2015, Second Revision April 15, 2015

Ordering Number Logic

Scalable Specification Grade Cobrahead (ERS2)

E R S 2

_ _ _ _   _   _ _   _ _   _   _ _   _   _ _ _ _   _ _

PROD. ID	VOLTAGE	OPTICAL CODE	PHOTOMETRIC TYPE	DRIVE CURRENT	LED COLOR TEMP	PE FUNCTION	COLOR	OPTIONS
E = Evolve R = Roadway S = Scalable 2 = Double Module Optical Assembly	0 = 120-277* 1 = 120 2 = 208 3 = 240 4 = 277 H = 347-480* D = 347 5 = 480 * Fusing not available with Voltage "0" or "H"	Product Tier *3 = Specification Grade See Charts for all levels	A1 = Extra Narrow Asymmetric B1 = Narrow Asymmetric (Medium) C1 = Asymmetric (Short) D1 = Asymmetric Forward E1 = Asymmetric (Medium)	5 = 525mA 7 = 700mA 1 = 1050mA	30 = 3000K 40 = 4000K 50 = 5000K* NOTE: For 1050mA drive current, nominal color temperature (CCT) = 5300K	1 = None 2 = PE Receptacle 4 = PE Receptacle & Shorting Cap 5 = PE Receptacle & ANSI C136.1 PE Control A = ANSI C136.41-7-pin Dimming Receptacle D = ANSI C136.41-7-pin Dimming Receptacle with Shorting Cap	BLCK = Black GRAY = Gray RAL # 8011 Nut Brown	D = Wired Dimming E = External Bubble Level F = Fusing G = Internal Bubble Level L = Tool-Less Entry R = Additional Secondary Surge Protection Device T = GE Energy Extreme Surge Protection per IEEE/ANSI C62.41.2-2002. - Rating 1 - 10kV/5kA Location Category (120 events). - Rating 2 - 6kV/3kA Location Category C-Low (5000 events). XXX = Special Options 112: House Side Optic

525 mA

PRODUCT ID	OPTICAL CODE	PHOTOMETRIC TYPE	DRIVE CURRENT	TYPICAL SYSTEM WATTAGE 120-277V	TYPICAL SYSTEM WATTAGE 347-480V	TYPICAL INITIAL LUMENS 3000K	TYPICAL INITIAL LUMENS 4000K & 5000K	BUG RATING 3000K	BUG RATING 4000K & 5000K	IES FILE NUMBERS 120-277V 3000K	IES FILE NUMBERS 120-277V 4000K	IES FILE NUMBERS 120-277V 5000K
	D3	A1	525mA	88	97	6700	8000	2-0-2	2-0-2	ERS2_D3A1530____-120-277V.IES	ERS2_D3A1540____-120-277V.IES	ERS2_D3A1550____-120-277V.IES
	E3		525mA	99	109	7500	9100	2-0-2	3-0-2	ERS2_E3A1530____-120-277V.IES	ERS2_E3A1540____-120-277V.IES	ERS2_E3A1550____-120-277V.IES
	F3		525mA	112	123	8600	10300	2-0-2	3-0-2	ERS2_F3A1530____-120-277V.IES	ERS2_F3A1540____-120-277V.IES	ERS2_F3A1550____-120-277V.IES
	G3		525mA	125	138	9600	11500	3-0-2	3-0-2	ERS2_G3A1530____-120-277V.IES	ERS2_G3A1540____-120-277V.IES	ERS2_G3A1550____-120-277V.IES
	H3		525mA	138	152	10600	12700	3-0-2	3-0-3	ERS2_H3A1530____-120-277V.IES	ERS2_H3A1540____-120-277V.IES	ERS2_H3A1550____-120-277V.IES
	D3	B1	525mA	88	97	6900	8200	2-0-1	2-0-1	ERS2_D3B1530____-120-277V.IES	ERS2_D3B1540____-120-277V.IES	ERS2_D3B1550____-120-277V.IES
	E3		525mA	99	109	7700	9300	2-0-1	2-0-1	ERS2_E3B1530____-120-277V.IES	ERS2_E3B1540____-120-277V.IES	ERS2_E3B1550____-120-277V.IES
	E3		525mA	112	123	8800	10600	2-0-1	3-0-2	ERS2_F3B1530____-120-277V.IES	ERS2_F3B1540____-120-277V.IES	ERS2_F3B1550____-120-277V.IES
	G3		525mA	125	138	9800	11800	2-0-1	3-0-2	ERS2_G3B1530____-120-277V.IES	ERS2_G3B1540____-120-277V.IES	ERS2_G3B1550____-120-277V.IES
	H3		525mA	138	152	10800	13000	3-0-2	3-0-2	ERS2_H3B1530____-120-277V.IES	ERS2_H3B1540____-120-277V.IES	ERS2_H3B1550____-120-277V.IES
	D3	C1	525mA	88	97	6900	8200	2-0-1	2-0-1	ERS2_D3C1530____-120-277V.IES	ERS2_D3C1540____-120-277V.IES	ERS2_D3C1550____-120-277V.IES
	E3		525mA	99	109	7700	9300	2-0-1	2-0-1	ERS2_E3C1530____-120-277V.IES	ERS2_E3C1540____-120-277V.IES	ERS2_E3C1550____-120-277V.IES
	F3		525mA	112	123	8800	10600	2-0-1	3-0-1	ERS2_F3C1530____-120-277V.IES	ERS2_F3C1540____-120-277V.IES	ERS2_F3C1550____-120-277V.IES
	G3		525mA	125	138	9800	11800	2-0-1	3-0-2	ERS2_G3C1530____-120-277V.IES	ERS2_G3C1540____-120-277V.IES	ERS2_G3C1550____-120-277V.IES
	H3		525mA	138	152	10800	13000	3-0-2	3-0-2	ERS2_H3C1530____-120-277V.IES	ERS2_H3C1540____-120-277V.IES	ERS2_H3C1550____-120-277V.IES
	D3	D1	525mA	88	97	6700	8000	2-0-1	2-0-1	ERS2_D3D1530____-120-277V.IES	ERS2_D3D1540____-120-277V.IES	ERS2_D3D1550____-120-277V.IES
	E3		525mA	99	109	7500	9100	2-0-1	2-0-2	ERS2_E3D1530____-120-277V.IES	ERS2_E3D1540____-120-277V.IES	ERS2_E3D1550____-120-277V.IES
	F3		525mA	112	123	8600	10300	2-0-2	2-0-2	ERS2_F3D1530____-120-277V.IES	ERS2_F3D1540____-120-277V.IES	ERS2_F3D1550____-120-277V.IES
	G3		525mA	125	138	9600	11500	2-0-2	2-0-2	ERS2_G3D1530____-120-277V.IES	ERS2_G3D1540____-120-277V.IES	ERS2_G3D1550____-120-277V.IES
	H3		525mA	138	152	10600	12700	2-0-2	3-0-2	ERS2_H3D1530____-120-277V.IES	ERS2_H3D1540____-120-277V.IES	ERS2_H3D1550____-120-277V.IES
	D3	E1	525mA	88	97	6900	8200	2-0-1	2-0-1	ERS2_D3E1530____-120-277V.IES	ERS2_D3E1540____-120-277V.IES	ERS2_D3E1550____-120-277V.IES
	E3		525mA	99	109	7700	9300	2-0-1	2-0-2	ERS2_E3E1530____-120-277V.IES	ERS2_E3E1540____-120-277V.IES	ERS2_E3E1550____-120-277V.IES
	F3		525mA	112	123	8800	10600	2-0-1	3-0-2	ERS2_F3E1530____-120-277V.IES	ERS2_F3E1540____-120-277V.IES	ERS2_F3E1550____-120-277V.IES
	G3		525mA	125	138	9800	11800	2-0-2	3-0-2	ERS2_G3E1530____-120-277V.IES	ERS2_G3E1540____-120-277V.IES	ERS2_G3E1550____-120-277V.IES
	H3		525mA	138	152	10800	13000	3-0-2	3-0-2	ERS2_H3E1530____-120-277V.IES	ERS2_H3E1540____-120-277V.IES	ERS2_H3E1550____-120-277V.IES

NOTES:

- Max Operating Ambient 50° C
- Some 347-480V Not DLC Listed (Contact Manufacturer)
- For T Option Availability (Contact Manufacturer)

Lumen Maintenance

- Projected L92 (10K) ≥ 50,000 at Ta 25C
- Projected L70 (10K) > 100,000 at Ta 25C

Based on 10,000h LM-80 data for Nichia 219B SQETMLH17005

Scalable Specification Grade Cobrahead

525 mA

PRODUCT ID	OPTICAL CODE	PHOTOMETRIC TYPE	DRIVE CURRENT	TYPICAL SYSTEM WATTAGE 120-277V	TYPICAL SYSTEM WATTAGE 347-480V	TYPICAL INITIAL LUMENS 3000K	TYPICAL INITIAL LUMENS 4000K & 5000K	BUG RATING 3000K	BUG RATING 4000K & 5000K	IES FILE NUMBERS 347-480V 3000K	IES FILE NUMBERS 347-480V 4000K	IES FILE NUMBERS 347-480V 5000K
	Z3	A1	525mA	31	34	2300	2700	1-0-1	1-0-1	ERS1_23A1530____347-480V.IES	ERS1_23A1540____347-480V.ies	ERS1_23A1550____347-480V.ies
	A3		525mA	45	50	3400	4000	1-0-1	1-0-1	ERS1_A3A1530____347-480V.IES	ERS1_A3A1540____347-480V.ies	ERS1_A3A1550____347-480V.ies
	B3		525mA	60	66	4500	5400	2-0-1	2-0-1	ERS1_B3A1530____347-480V.IES	ERS1_B3A1540____347-480V.ies	ERS1_B3A1550____347-480V.ies
	C3		525mA	73	80	5500	6600	2-0-1	2-0-2	ERS1_C3A1530____347-480V.IES	ERS1_C3A1540____347-480V.ies	ERS1_C3A1550____347-480V.ies
	Z3	B1	525mA	31	34	2300	2800	1-0-1	1-0-1	ERS1_23B1530____347-480V.IES	ERS1_23B1540____347-480V.ies	ERS1_23B1550____347-480V.ies
	A3		525mA	45	50	3500	4100	1-0-1	1-0-1	ERS1_A3B1530____347-480V.IES	ERS1_A3B1540____347-480V.ies	ERS1_A3B1550____347-480V.ies
	B3		525mA	60	66	4600	5500	1-0-1	2-0-1	ERS1_B3B1530____347-480V.IES	ERS1_B3B1540____347-480V.ies	ERS1_B3B1550____347-480V.ies
	C3		525mA	73	80	5600	6800	2-0-1	2-0-1	ERS1_C3B1530____347-480V.IES	ERS1_C3B1540____347-480V.ies	ERS1_C3B1550____347-480V.ies
	Z3	C1	525mA	31	34	2300	2800	1-0-1	1-0-1	ERS1_23C1530____347-480V.IES	ERS1_23C1540____347-480V.ies	ERS1_23C1550____347-480V.ies
	A3		525mA	45	50	3500	4100	1-0-1	1-0-1	ERS1_A3C1530____347-480V.IES	ERS1_A3C1540____347-480V.ies	ERS1_A3C1550____347-480V.ies
	B3		525mA	60	66	4600	5500	1-0-1	2-0-1	ERS1_B3C1530____347-480V.IES	ERS1_B3C1540____347-480V.ies	ERS1_B3C1550____347-480V.ies
	C3		525mA	73	80	5600	6800	2-0-1	2-0-1	ERS1_C3C1530____347-480V.IES	ERS1_C3C1540____347-480V.ies	ERS1_C3C1550____347-480V.ies
	Z3	D1	525mA	31	34	2300	2700	1-0-1	1-0-1	ERS1_23D1530____347-480V.IES	ERS1_23D1540____347-480V.ies	ERS1_23D1550____347-480V.ies
	A3		525mA	45	50	3400	4000	1-0-1	1-0-1	ERS1_A3D1530____347-480V.IES	ERS1_A3D1540____347-480V.ies	ERS1_A3D1550____347-480V.ies
	B3		525mA	60	66	4500	5400	1-0-1	1-0-1	ERS1_B3D1530____347-480V.IES	ERS1_B3D1540____347-480V.ies	ERS1_B3D1550____347-480V.ies
	C3		525mA	73	80	5500	6600	1-0-1	2-0-1	ERS1_C3D1530____347-480V.IES	ERS1_C3D1540____347-480V.ies	ERS1_C3D1550____347-480V.ies
	Z3	E1	525mA	31	34	2300	2800	1-0-0	1-0-1	ERS1_23E1530____347-480V.IES	ERS1_23E1540____347-480V.ies	ERS1_23E1550____347-480V.ies
	A3		525mA	45	50	3500	4100	1-0-1	1-0-1	ERS1_A3E1530____347-480V.IES	ERS1_A3E1540____347-480V.ies	ERS1_A3E1550____347-480V.ies
	B3		525mA	60	66	4600	5500	1-0-1	2-0-1	ERS1_B3E1530____347-480V.IES	ERS1_B3E1540____347-480V.ies	ERS1_B3E1550____347-480V.ies
	C3		525mA	73	80	5600	6800	2-0-1	2-0-1	ERS1_C3E1530____347-480V.IES	ERS1_C3E1540____347-480V.ies	ERS1_C3E1550____347-480V.ies

NOTES:
- Max Operating Ambient 50° C
- 347-480V Not Available in 700mA & 1050mA
- For T Option (Contact Manufacturer)

Lumen Maintenance

- Projected L91 (10K) ≥ 50,000 at Ta 25C
- Projected L70 (10K) > 100,000 at Ta 25C
  Based on 10,000h LM-80 data for Nichia 219B SQETMLH17005

Product Dimensions

Evolve LED Scalable Specification Grade Cobrahead (ERS1)

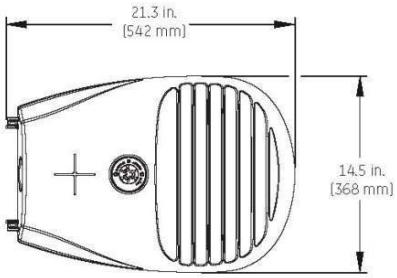

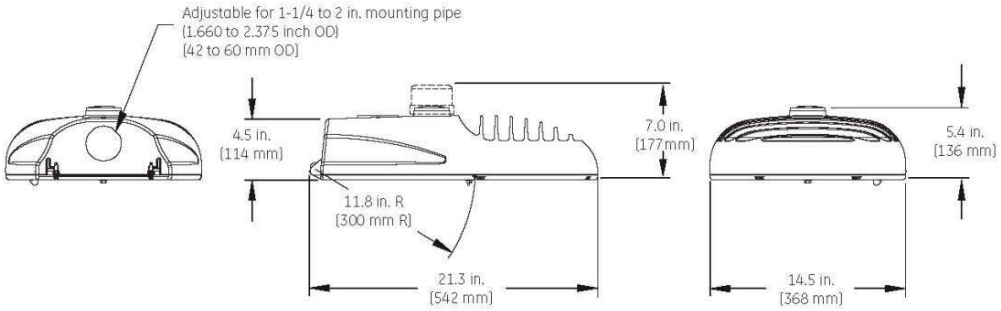

DATA

- Approximate Net Weight: 20 to 25 lbs. (9.07 to 11.34 kgs.) Contact manufacturer for specific configuration weight.
- Effective Projected Area (EPA): 0.5 sq. ft. max (0.046 sq. m)

Evolve LED Scalable Specification Grade Cobrahead (ERS2)

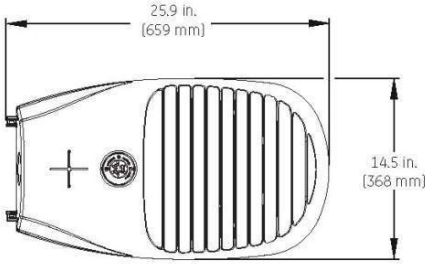

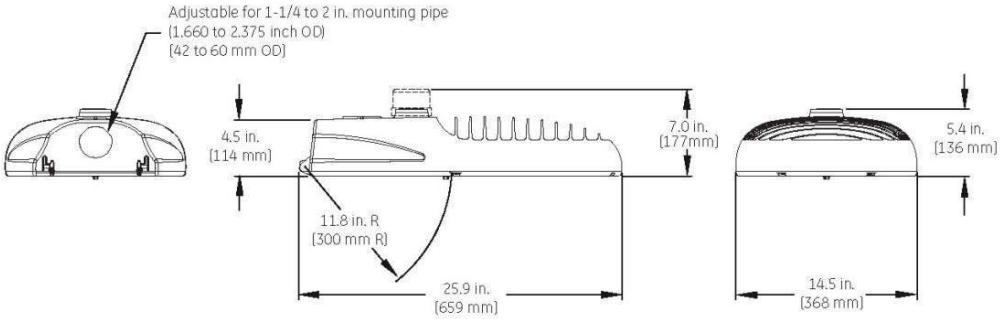

DATA

- Approximate Net Weight: 25 to 29 lbs. (11.34 to 13.15 kgs.) Contact manufacturer for specific configuration weight.
- Effective Projected Area (EPA): 0.7 sq. ft. max (0.065 sq. m)