CLEAR FLOOR SPACE NON-RESIDENTIAL TOILET ROOMS FOR INDIVIDUAL USE

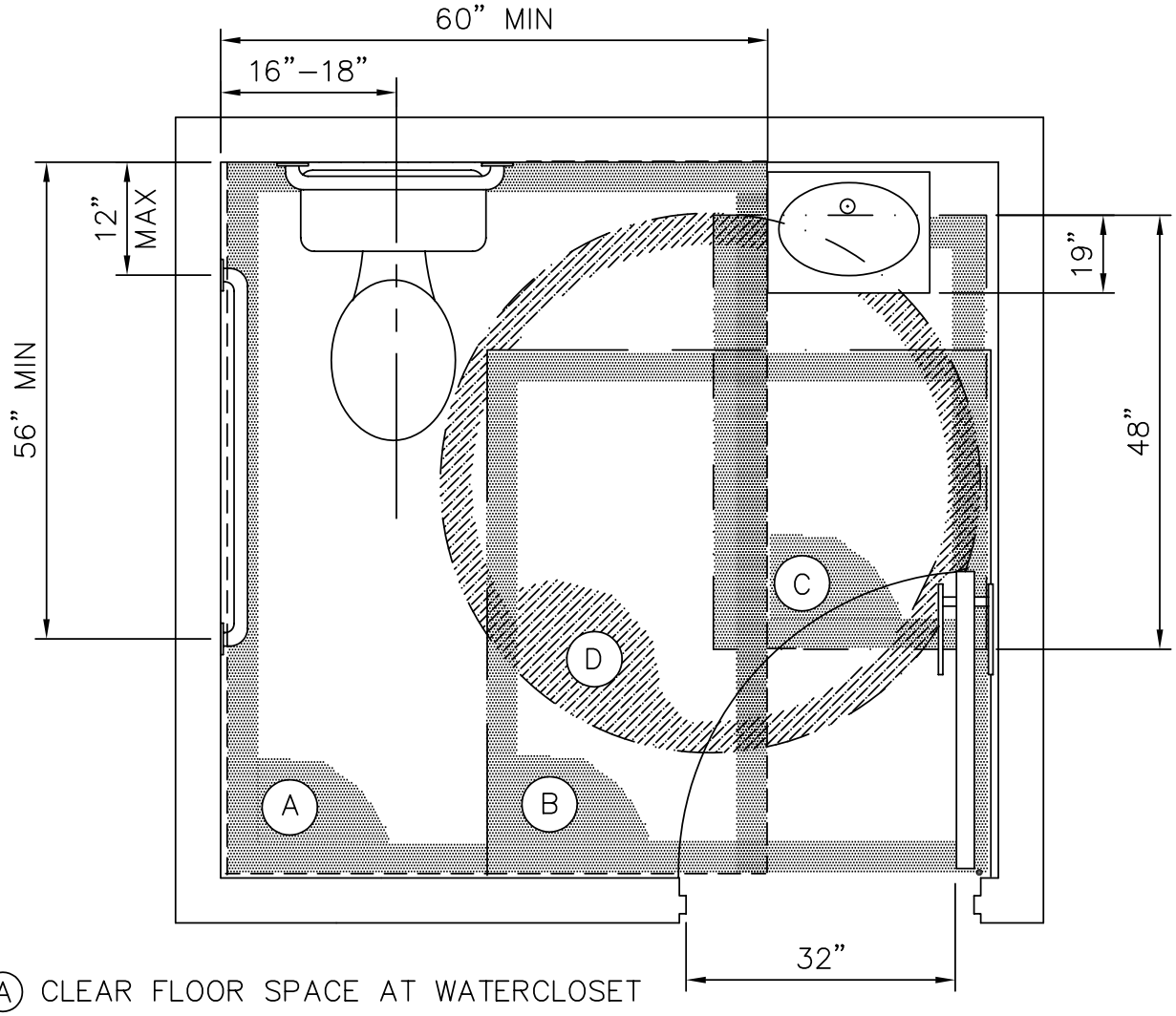

(A) CLEAR FLOOR SPACE AT WATERCLOSET

(B) CLEAR FLOOR SPACE AT DOOR PER ICC/ANSI CHAPTER 4

(C) CLEAR FLOOR SPACE AT LAVATORY 30"x 48" FOR FORWARD APPROACH AND MAY EXTEND A MAXIMUM OF 19" UNDER THE LAVATORY.

(D) WHEELCHAIR TURNING SPACE; 60" DIAMETER CIRCLE OR T–SHAPE PER ICC/ANSI CHAPTER 3

CLEAR FLOOR SPACES MAY OVERLAP EACH OTHER.

DOORS SHALL NOT SWING INTO THE CLEAR FLOOR SPACE REQUIRED FOR ANY FIXTURE UNLESS THE TOILET ROOM IS FOR INDIVIDUAL USE ONLY OR A CLEAR FLOOR SPACE 30"X 48" IS PROVIDED BEYOND THE ARC OF THE DOOR SWING IN THE TOILET ROOM.