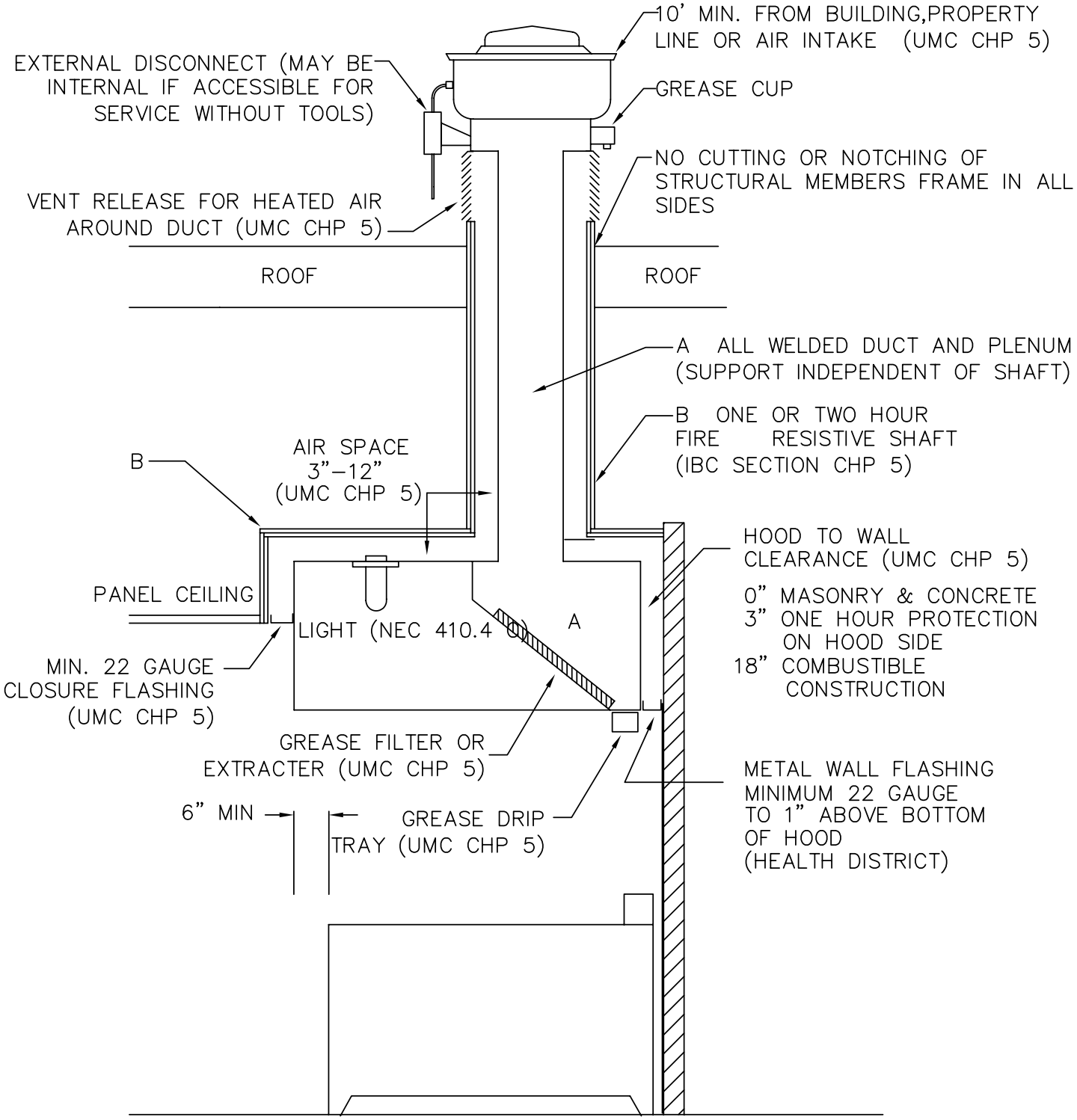TYPE I KITCHEN HOOD AND EXHAUST SINGLE